OPERATOR'S AND PARTS MANUAL

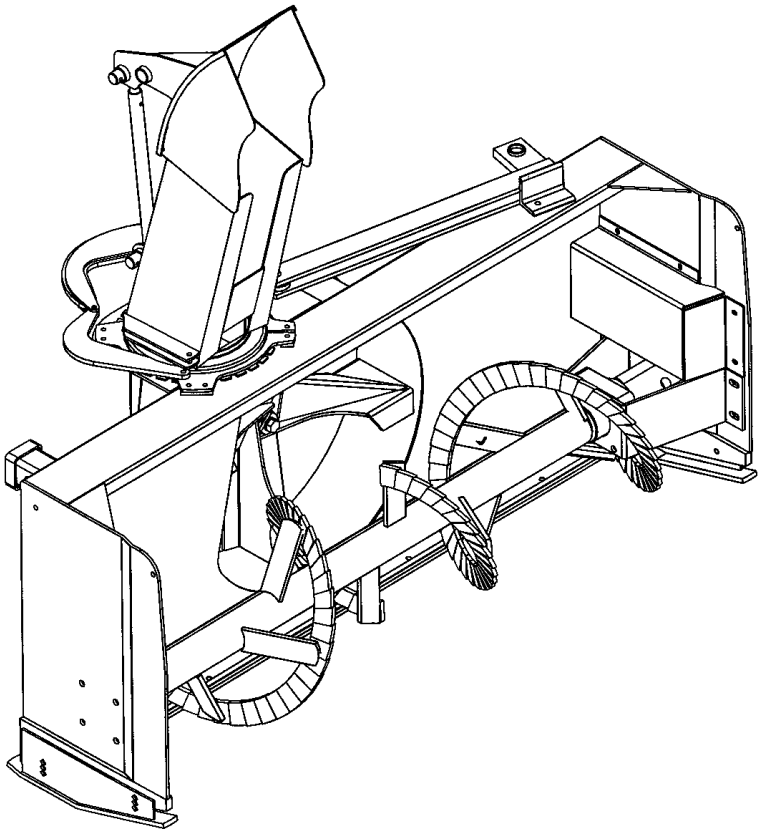

64" Hydraulic SNOWBLOWER – H64
76" Hydraulic SNOWBLOWER – H76

SERIAL NO. 2019748 AND UP

OM 0303SB-A
01/02

BER-VAC

par RAD Technologies Inc.

TABLE OF CONTENT

INTRODUCTION – TO THE PURCHASER 3

SAFETY PRECAUTIONS
- Before Operation 4
- Notice 5
- The Snowblower 5
  - Before Operation 5
  - Snowblower Operation 6
- The Tractor 7
  - General Information 7
  - Operating the Tractor 7
  - During Operation 8
  - Roll-Over Protective Structure (ROPS) 8
- Maintenance 9
- Transporting 10
- Storage 10

DECALS 11

ASSEMBLY 13
- Hydraulic Hoses Installation 13
- Chute & Skid shoes Installation for H64 14
- Chute & Skid shoes Installation for H76 15
- Chute Rotation for H64 16
- Chute Rotation for H76 17
- Installation of the Universal Hitch - 8153 18
- Drift Cutters Installation -8152 19
- Hydraulic Rotation - 8183 20
- Hydraulic Deflector - 8184 23
- 8151- Electric Rotation & Deflector 28
- 8154- Electric Deflector for H64 30

OPERATION 32
- General Preparation 32
- Operating Controls 32
  - Manual Deflector Adjustment 32
  - Hydraulic or Electric Deflector Adjustment 32
  - Hydraulic or Electric Rotation Adjustment 32
  - Work & Travel Speed 32
  - Skid shoes Adjustment 32
- Snow Removal Method 34

TABLE OF CONTENT

MAINTENANCE

Maintenance 35
Storage 35
Hydraulic System Oil 35
Lubrication 36
Verification 36
Troubleshooting 37
Secifications 39

PARTS 40

Introduction 40
Hydraulic Snowblower H64 & H76 41
Hydraulic System 43
Chute – for H64 45
Chute – for H76 46
Chute Rotation – for H64 47
Chute Rotation – for H76 48
Universal Hitch – 8153 49
Drift Cutters – 8152 (Option) 50
Hydraulic Deflector - 8183 51
Hydraulic Deflector - 8184 53
Electric Rotation - 8151 55
Electric Rotation - 8154 56
Hydraulic Motor 57

WARRANTY 59
TORQUE SPECIFICATION TABLE 60

INTRODUCTION

IMPORTANT NOTICE

The Ber-Vac Hydro snowblowers are calibrated and tested at the plant in order to ensure the best possible performances. The calibration of these snowblowers requires the proper equipment and a certain expertise.

Any partial modification or adjustment made on the snowblower without the written consent of RAD Technologies inc. will result in the immediate cancellation of the snowblower's warranty.

The adjustments of the hydraulic components must never be modified.

TO THE PURCHASER

All products are designed to give safe, dependable service if they are operated and maintained according to instructions. **Read and understand this manual before operation.**

Read and understand this operator's manual before attempting to put equipment into service. Familiarize yourself with the operating instructions and all the safety recommendations contained in this manual and those labeled on the equipment and on the tractor. Follow the safety recommendations and make sure that those with whom you work follow them.

Illustrations

The illustrations may not necessarily reproduce the full detail and the exact shape of the parts or depict the actual models, but are intended for reference only.

Direction Reference

All references to right and left, forward or rearward, are from the operator's seat, facing the steering wheel.

To assist your dealer in handling your needs, please record hereafter the model number and serial number of your equipment and tractor. It is also advisable to supply them to your insurance company. It will be helpful in the event that an equipment or tractor is lost or stolen.

	TRACTOR	IMPLEMENT
MODEL:		
SERIAL NUMBER:		
DATE OF PURCHASE:		
DEALER NAME:		

SAFETY PRECAUTIONS

SAFETY FIRST

This symbol, the industry's "Safety Alert Symbol", is used throughout this manual and on labels on the machine itself to warn of the possibility of personal injury. Read these instructions carefully. It is essential that you read the instructions and safety regulations before you attempt to assemble or use this unit.

DANGER : Indicates an immediate hazardous situation which, if not avoided, will result in death or serious injury.

WARNING : Indicates a potentially hazardous situation which, if not avoided, could result in death or serious injury.

CAUTION : Indicates a potentially hazardous situation which, if not avoided, may result in minor or moderate injury.

IMPORTANT : Indicates that equipment or property damage could result if instructions are not followed.

NOTE : Gives helpful information.

All products are designed to give safe, dependable service if they are operated and maintained according to instructions. **Read and understand this manual before operation**. It is the owner's responsibility to be certain anyone operating this product reads this manual, and all other applicable manuals, to become familiar with this equipment and all safety precautions. Failure to do so could result in serious personal injury or equipment damage. If you have any questions, consult your dealer.

BEFORE OPERATION

Children

Tragic accidents can occur if the operator is not alert to the presence of children. Children are generally attracted to machines and the work being done. Never assume children will remain where you last saw them.

1. Keep children out of the operating area and under the watchful eye of another responsible adult.
2. Be alert and turn machine off if children enter the work area.
3. Before and when backing, look behind for small children.
4. Never carry children while operating the machine. They may fall off and be seriously injured or interfere with the safe operation of the machine.
5. Never allow children to play on the machine or attachment even when they are turned off.
6. Never allow children to operate the machine even under adult supervision.
7. Use extra care when approaching blind corners, shrubs, trees, or other obstructions that might hide children from sight.

NOTICE

A safe operator is the best assurance against accidents. All operators, no matter how experienced they may be, should read this operator's manual and all other related manuals before attempting to operate the equipment. Please read the following section and pay particular attention to all safety recommendations contained in this manual and those labeled on the equipment and on the tractor.

THE SNOWBLOWER

Before Operation

1. Read and understand this operator's manual and tractor operator's manual. Know how to operate all controls and how to stop the unit and disengage the controls quickly.
2. Never wear loose, torn, or bulky clothing around the tractor and the snowblower. It may catch on moving parts or controls, causing injury.
3. Before and during the snow season, thoroughly inspect the area where the equipment is to be used and remove all objects that may be thrown or cause damage to the equipment.
4. Set transmission to neutral and disengage clutch, if equipped, before starting the engine.
5. Do not operate equipment in wintertime without wearing adequate winter garments and protective clothing.
6. Never attempt to make any adjustments while engine is running. Read this manual carefully to acquaint yourself with the equipment as well as the tractor operator's manual. Working with unfamiliar equipment can lead to accidents. Be thoroughly familiar with the controls and proper use of the equipment.
7. Keep all safety guards in place and verify hardware for proper tightening.
8. Check for moving parts excessive wear regularly. Replace worn parts with genuine parts.
9. Replace all missing, illegible, or damaged safety and warning decals. See list of decals in operator's manual.
10. Keep safety decals clean of dirt and grime.
11. Do not modify or alter this equipment or any of its components, or any equipment function without first consulting your dealer.
12. Use of rear counterweights is recommended. Weights provide the necessary balance to improve stability, traction and steering. Use only those recommended by your dealer.

SNOWBLOWER OPERATION

1. Before leaving the tractor unattended, take all possible precautions. Park the tractor/snowblower on level ground, place the transmission in neutral, set the parking brake, disengage the equipment drive, lower the equipment to the ground, place all levers including auxiliary control levers in neutral, shut off the engine and remove the ignition key.
2. Before starting the tractor/ snowblower, remove any ice that has accumulated in the auger/fan.
3. Prior to operation, clear work area of all objects that can be picked up and thrown. Mark all curbs, pipes, etc. that cannot be moved.
4. Be sure the PTO switch/lever is in OFF position before starting engine.
5. Exercise extreme caution when operating on or crossing a gravel drive, walks, or roads. Stay alert for hidden hazards or traffic.
6. Do not carry passengers.
7. Adjust collector-housing height to clear gravel or crushed rock surface.
8. Keep clear of rotating parts. Do not put hands or feet under, or into snowblower with engine running.
9. Park the tractor/snowblower on level ground, place the transmission in neutral, set the parking brake, disengage the equipment drive, lower the equipment to the ground, place all control levers in neutral, shut off the engine, remove the ignition key and allow the rotating parts to stop BEFORE unclogging the collector/fan housing or chute, and making any repairs, adjustments or inspections. Use only a 36" long piece of wood to unclog blower.
10. If the snowblower starts to vibrate abnormally, disengage the equipment drive, stop the engine immediately and check for cause. Excessive vibration is generally a sign of trouble.
11. Do not run the engine indoors except when starting engine and transporting attachment in or out of building. Carbon monoxide gas is colorless, odorless and deadly.
12. Do not attempt to operate on steep slopes. If operating on slopes is necessary, exercise extreme caution when changing direction.
13. Never operate snowblower without guards, and other safety protective devices in place.
14. Keep clear of chute discharge. This chute has the capability of throwing objects at far distances.
15. Never operate snowblower near glass enclosures, automobiles, window wells, embankments, etc., without proper adjustment of snow discharge angle.
16. Never operate machine at high transport speeds on a slippery surface.
17. Use extra caution when backing up.
18. Do not direct discharge at bystanders or animals. Ejected objects may cause injury.
19. Disengage power to auger/fan when transporting or when not in use.
20. Never operate the snowblower without good visibility and lighting.
21. Prolonged exposure to loud noise can cause impairment or loss of hearing. Wear a suitable hearing protective device such as earmuffs or earplugs to protect against objectionable or uncomfortable noises.
22. Never allow anyone near the work area.

THE TRACTOR

General Information

1. Read the operator's manual carefully before using tractor. Lack of operating knowledge can lead to accidents.
2. Do not permit anyone but the operator to ride on the tractor. There is no safe place for passengers.

Operating the Tractor

1. Never run the tractor engine in a closed building without adequate ventilation, as the exhaust fumes are very dangerous.
2. Adopt safe driving practice. If so equipped, keep the brake pedals latched together at all times unless independent braking is required. Never use independent braking during transport.
3. Always drive at a safe speed relative to local conditions and ensure that your speed is low enough for an emergency stop to be safe and secure.
4. Reduce speed prior to turns to avoid the risk of overturning. Keep speed to a minimum.
5. Always keep the tractor in gear to provide engine braking when going downhill. Do not coast.
6. Never allow an open flame near the fuel tank or battery.
7. Park the tractor/snowblower on level ground, place the transmission in neutral, set the parking brake, disengage the equipment drive, lower the equipment to the ground, place all levers including auxiliary control levers in neutral, shut off the engine and remove the ignition key BEFORE leaving the tractor.
8. Never park the tractor on a steep slope.
9. Do not attempt to operate on steep slopes. Avoid sudden uphill turns on steep slopes.
10. Use of rear counterweights for better traction and stability is recommended.
11. Handle fuel with care, as it is highly flammable.
12. Use approved fuel container.
13. Never add fuel to a running engine or a hot engine.
14. Fill fuel tank outdoors with extreme care. Never fill fuel tank indoors. Replace fuel cap securely and wipe up spilled fuel.
15. Never allow anyone to operate the snowblower until they have read the manual completely and are thoroughly familiar with basic tractor and snowblower operation.
16. Make sure the tractor is counterweighted as recommended by your dealer. Weights provide the necessary balance to improve stability, traction and steering.
17. Always make sure all snowblower components are properly installed and securely fastened BEFORE operation.
18. Never attempt to start the engine and/or engage snowblower drive while standing beside the tractor.
19. Always start the engine from the operator's seat with all the transmission lever(s) and snowblower drive lever in neutral.
20. DO NOT bypass the safety system by shorting across the terminals of the starter motor to start the engine. This may cause the tractor to move suddenly.
21. If the safety start system does not work, consult your dealer immediately.

During Operation

1. Do not allow passengers on the tractor/snowblower at any time. There is no safe place for passengers on this equipment. The operator MUST sit in the tractor seat.
2. Eye and hearing protection is recommended when operating the snowblower.
3. Operate only during daylight hours, or when the area is well lit with bright artificial light.
4. Park the tractor/snowblower on level ground, place the transmission in neutral, set the parking brake, disengage the PTO, lower the equipment to the ground, place all control levers in neutral, shut off the engine and remove the ignition key BEFORE leaving the operator's seat.
5. Inspect the snowblower after striking any foreign object to assure that all snowblower parts are safe and secure and not damaged.
6. Be especially observant of the operating area and terrain. Watch for holes, rocks, or other hidden hazards. ALWAYS inspect the area prior to blowing.
7. DO NOT blow near the edge of drop-offs or banks.
8. DO NOT blow on steep slopes as overturn may result.
9. Operate up and down (not across) intermediate slopes. Avoid sudden starts and stops.
10. Drive tractor backwards up steeper slopes with blower off. Then blow as you travel down the slope.
11. Slow down before you change directions on any slope.
12. Use wheel weights on your tractor to increase stability on slopes.
13. Never stand alongside of the unit while the engine is running.

Roll-Over Protective Structure (ROPS) (If so equipped)

1. DO NOT weld, drill or alter the ROPS. Damaged ROPS must not be straightened or used. If damage does occur, consult your dealer.
2. If the ROPS is lowered or removed from the tractor for any reason, it must be erected and/or refitted immediately. Original bolts or equivalent replacements must be used and tightened to the correct torque.
3. Your dealer does not recommend usage of tractor with ROPS removed.
4. If a fold-down ROPS is used, the ROPS can be folded down for storage, but it must be pinned in the upright position prior to operation.
5. Seat belt usage: With ROPS installed on the tractor it is imperative that the seat belt be installed, used and correctly adjusted, at all times. DO NOT use a seat belt if operating without ROPS.
6. Additionnal safety equipment: A fire extinguisher and first aid kit should be kept readily accessible..

MAINTENANCE

ALWAYS USE GENUINE PARTS WHEN REPLACEMENT PARTS ARE REQUIRED

1. Keep the tractor and snowblower properly maintained.
2. Park the tractor/snowblower on level ground, place the transmission in neutral, set the parking brake, disengage the equipment drive, lower the equipment to the ground, place all control levers in neutral, shut off the engine and remove the ignition key and allow the rotating parts to stop BEFORE making any snowblower adjustments.
3. To avoid injury, do not adjust, unclog or service the snowblower with the tractor engine running. Make sure rotating components have completely stopped before leaving the operator's seat.
4. Keep the tractor/snowblower clean. Snow and ice build-up can lead to malfunction or personal injury from thawing and refreezing in garage.
5. Always wear eye protection when cleaning or servicing the snowblower.
6. Service the unit in safety: DO NOT service the tractor while the engine is running or hot, or if the unit is in motion. Always lower snowblower to the ground. If necessary to service unit with blower raised, securely support with stands or suitable blocking before working underneath. Do not rely on hydraulically supported devices for your safety. They can settle suddenly, leak down, or be accidentally lowered.
7. Do not attempt to service machine, clear obstructions or unplug blockages with the engine running. Always shut off engine and allow all motion to cease.
8. The manufacturer will not claim responsibility for fitment of unapproved parts and/or accessories and any damages as a result of their use.
9. Make sure all shields and guards are securely in place following all service, cleaning, or repair work.
10. Do not modify or alter this equipment or any of its components or operating functions. If you have questions concerning modifications, consult with your dealer.
11. Do not operate a unit, which is defective or has missing parts. Make sure that all recommended maintenance procedures are completed before operating the unit.
12. Check all controls regularly and adjust where necessary. Make sure that the brakes are evenly adjusted.
13. Periodically check all nuts and bolts for tightness, especially wheel hub and rim nuts.
14. Snowblower fan and auger must be checked for tightness. Remove any twine, wire, etc. that may have wrapped on the fan or the auger.
15. To avoid serious personal injury: Escaping hydraulic/diesel fluid under pressure can penetrate the skin causing serious injury. Do not use your hands to check for leaks. Use a piece of cardboard or paper to search for leaks.
16. Stop engine and relieve pressure before connecting or disconnecting lines. Tighten all connections before starting engine or pressurizing lines.

TRANSPORTING

1. Transporting on public roadway: When driving the tractor and equipment on the road or highway under 25 mph, at night or during the day, use flashing amber warning lights and the Slow Moving Vehicle ("SMV") identification emblem.
2. Check local traffic codes that may apply to unit usage on public roads and highways in your area. The use of flashing amber lights is acceptable in most localities. However, some localities may prohibit their use.
3. Always disengage equipment drive prior to transporting unit.

STORAGE

Before storing the snowblower, certain precautions should be taken to protect it from deterioration.

1. Clean the snowblower thoroughly.
2. Make all the necessary repairs.
3. Replace all safety signs that are damaged, lost, or otherwise become illegible. If a part to be replaced has a sign on it, obtain a new safety sign from your dealer and install it in the same place as on the removed part.
4. Repaint all parts from which paint has worn or peeled.
5. Lubricate the snowblower as instructed under **"Lubrication"** section.
6. When the snowblower is dry, oil all moving parts. Apply oil liberally to all surfaces to protect against rust.
7. Store in a dry place.

DECALS

Replace immediately if damaged

For H64 snowblower

656779

660988

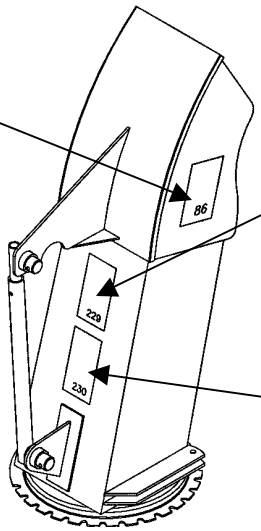

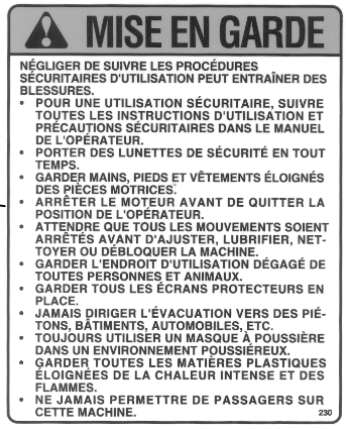

660989

656780

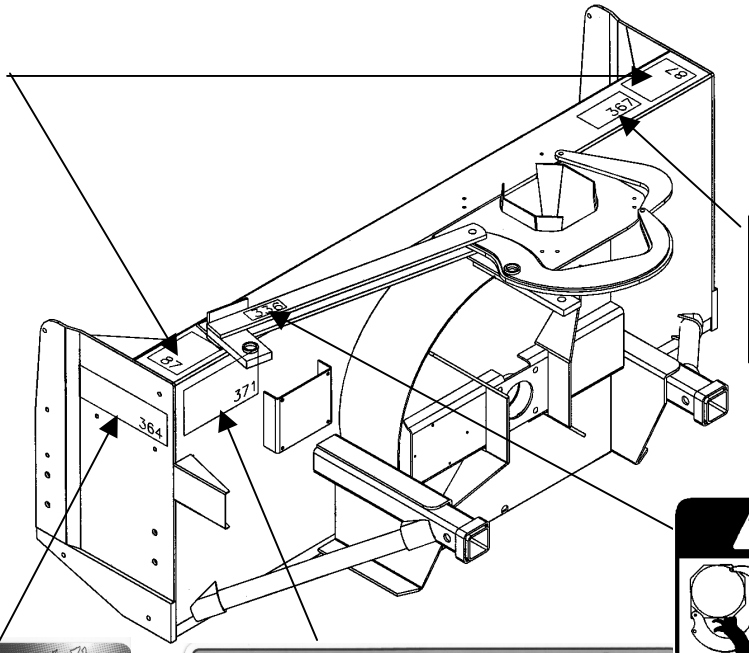

2500311

664548

2500308

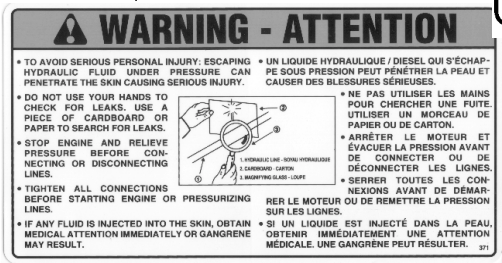

2500315

DECALS

Replace immediately if damaged
For H76 snowblower

656779

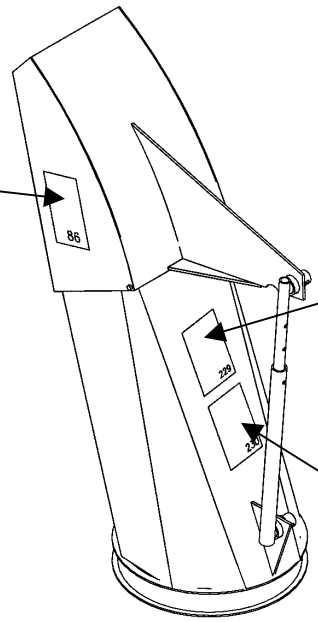

660988

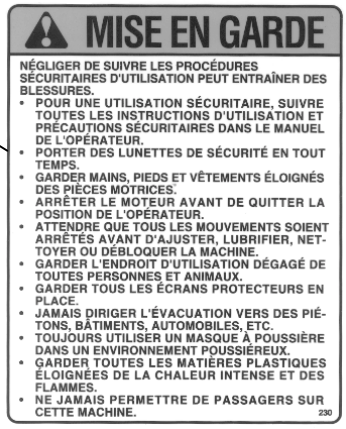

660989

656780

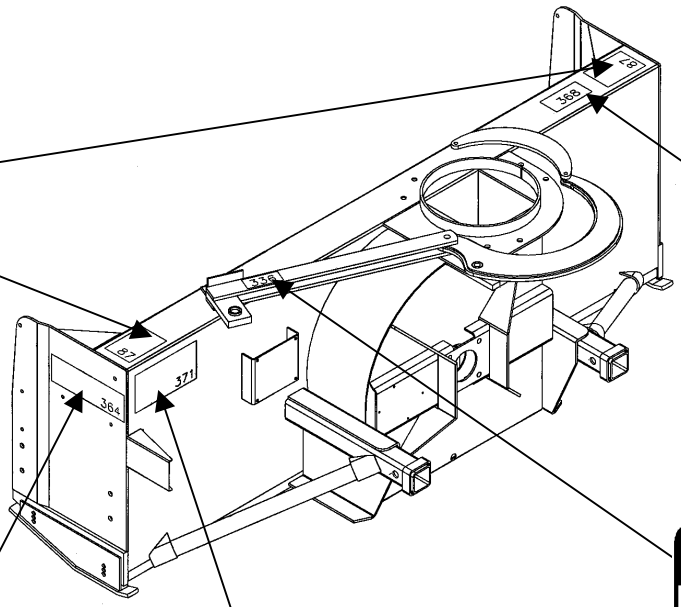

2500312

664548

2500308

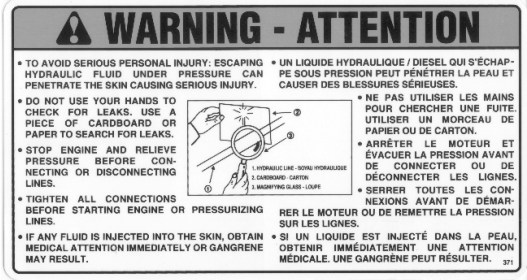

2500315

SNOWBLOWER ASSEMBLY

The snowblower is preassembled at the factory, however snowblower kits must be assembled. Use the present manual and lay out all parts for assembly. Separate bolts and nuts into various sizes. After assembly, torque all the bolts according to the "*Torque Specification Table"* enclosed at the end of the manual.

Installing the Hydraulic Hoses

NOTE: The adapters and the supply hoses are not included and will need to be specifically made for the machine.

Remove the plugs located on top of the snowblower's manifold.

1. Insert two adapters 1 1/16" JIC male x 1 1/16" ORB male in the "IN" and "OUT" ports of the manifold.
2. Install the input and the output hoses by using two 3/4" @ 3500psi hoses long enough to compensate for the extra length required by the movement of the tractor's articulations, with at one end a 1 1/16" JIC piv. female bent at 90° fitting and the other end fitted according to the tractor's hydraulic ports.
3. Screw the 1 1/16" JIC piv. female, bent at 90° fitting on the adapter previously installed. Connect the tractor to the snowblower by passing the hoses through the ring on top the hitch.

IMPORTANT: The snowblower's oil feed is done by the hose connected to the "IN" port on the snowblower and the return is done by the "OUT" port.

CAUTION: Escaping hydraulic/diesel fluid under pressure can penetrate the skin causing severe injuries.

- **Do not use your hands to check for leaks. Use a piece of cardboard or paper to search for leaks.**

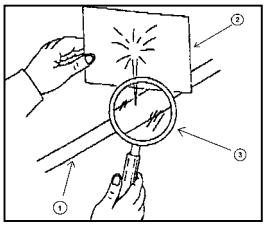

1. **Hydraulic line**
2. **Cardboard**
3. **Magnifying glass**

- **Shut engine off and relieve pressure before connecting or disconnecting lines.**
- **Tighten all connections before starting engine or pressurizing lines.**
- **If any fluid is injected into the skin, obtain medical attention immediately or gangrene may result.**

Installing the Chute and Skid Shoes H64 (Figure 1)

1. Lift slightly each side of the snowblower, one after the other.
2. Install the skid shoes (items 2-3) using two 3/8"NC x 1 1/4" carriage bolts, 3/8" lockwashers and 3/8" hex. nuts (item 11-12-13).

NOTE: Make sure to install the left and right skid shoes on the correct side. The widest rim of the skid shoes goes inside the snowblower. (see fig.1).

3. Put the snowblower back up.
4. Put the rotation bushing (item 7) on the snowblower opening.
5. Install the chute (item 1) over the bushing and secure with the spacers (item 6) and the large retaining plate in front and the smaller one in the back (items 4-5) as shown on Figure 1. Lock in place using eight 1/4"NC x 1 1/4" hex bolts, 1/4" lockwashers 1/4"NC hex. nuts (item 8-9-10).

NOTE: Apply grease under the retaining plates where it will come in contact with the base of the chute.

Figure 1

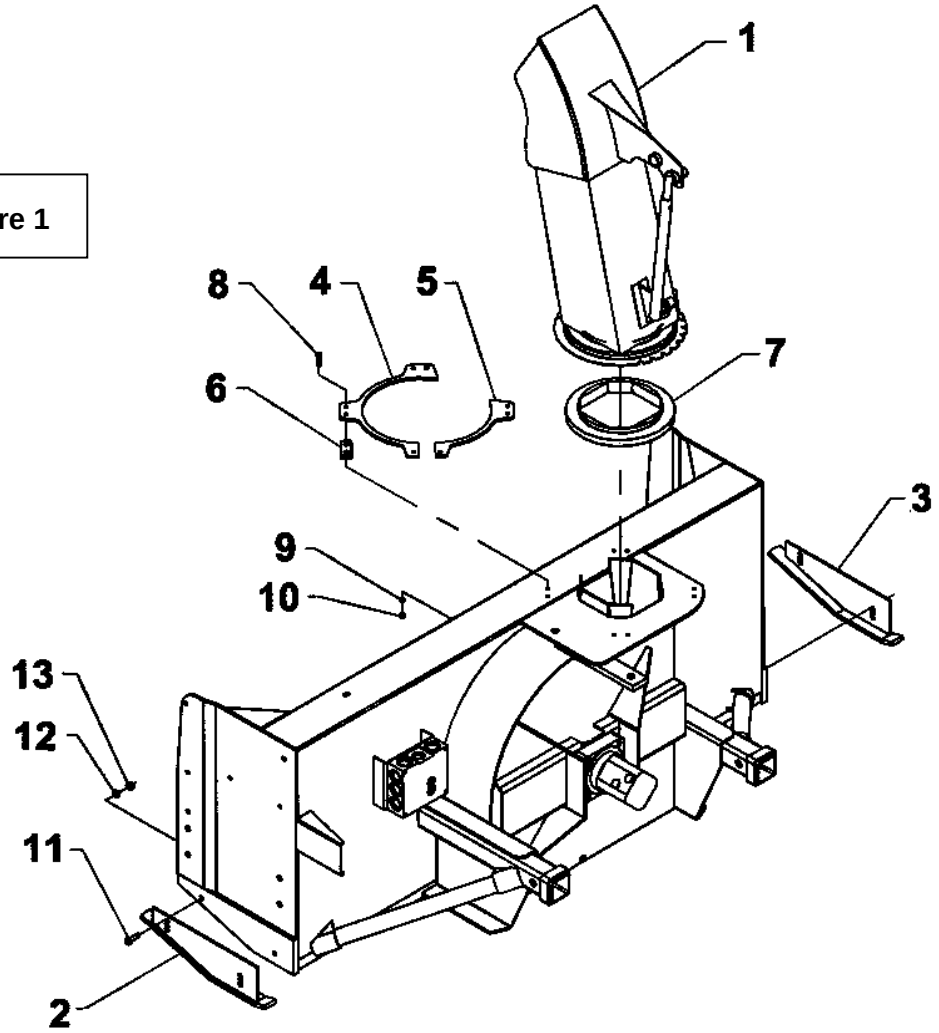

Installing the Chute and Skid Shoes H76 (Figure 2)

1. Lift slightly each side of the snowblower, one after the other.
2. Install the skid shoes (items 2-3) using two 3/8"NC x 1 1/4" carriage bolts, 3/8" lockwashers and 3/8" hex. nuts (items 8-9-10).

NOTE: Make sure to install the left and right skid shoes on the correct side. The widest rim of the skid shoes goes inside the snowblower. (see fig. 2).

3. Put the snowblower back up.
4. Place the rotation ring (item 7) on the snowblower opening.
5. Install the chute (item 1) over the rotation ring and secure with the spacers (items 5-6) and the two retaining plates (item 4). Lock in place using six 1/2" NC x 1 3/4" carriage bolts, 1/2" lockwashers and 1/2" hex. nuts (items 11-12-13).

NOTE: Apply grease under of the retaining plates where it will come in contact with the base of the chute and on the exterior contour of the round flatbar located on top of the snowblower.

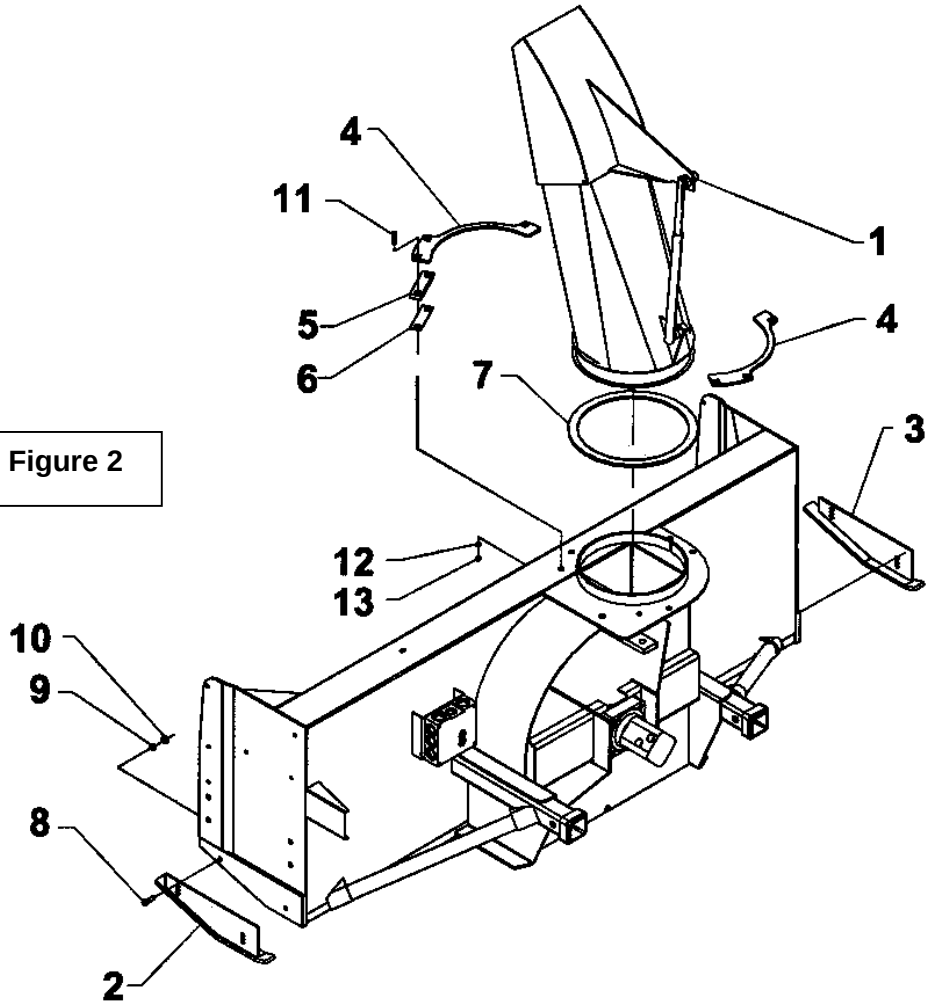

Figure 2

Chute Rotation - H64 (Figure 3)

1. Attach the cylinder support (item 1) on top of the frame with a 3/8"NC x 1" hex. bolt (item 13), ∅7/16" hole flatwasher , a 3/8" lockwasher and a 3/8" NC nut (items 6-7-8).

2. Install the bell crank (item 2) by sliding a pivot spacer (item 4) under the cylinder support (item 1) and aligning it with the 11/16"∅ hole in the frame. Insert the pivot bushing (item 5) in the ∅1 1/8" bell crank hole (using some sandpaper, remove the paint surplus from the hole until the bushing is inserted easily by hand) and slide it between the flat bars of the cylinder support. Secure in place with a 5/8"NC x 3 1/2" hex. bolt, a lockwasher and a nut (items 12-16-17).

3. Attach the push arm (item 3) by inserting it between the bell crank plates and greasing liberally. Insert a 3/8" x 3/4", 5/16"NC shoulder bolt (item 14) under and secure with a ∅3/8" hole flatwasher and a 5/16"NC stover nut (item 10-9), making sure the push arm pivots freely.

4. Attach the other end of the push arm by inserting it between the chute's welded flat bars. Place a ∅7/16" hole nylon flatwasher (item 15) under the push arm and secure everything with a 3/8" x 1", 5/16"NC shoulder screw (item 11), a ∅3/8" hole flatwasher and a 5/16"NC stover nut (item 10-9), making sure everything pivots freely..

Figure 3

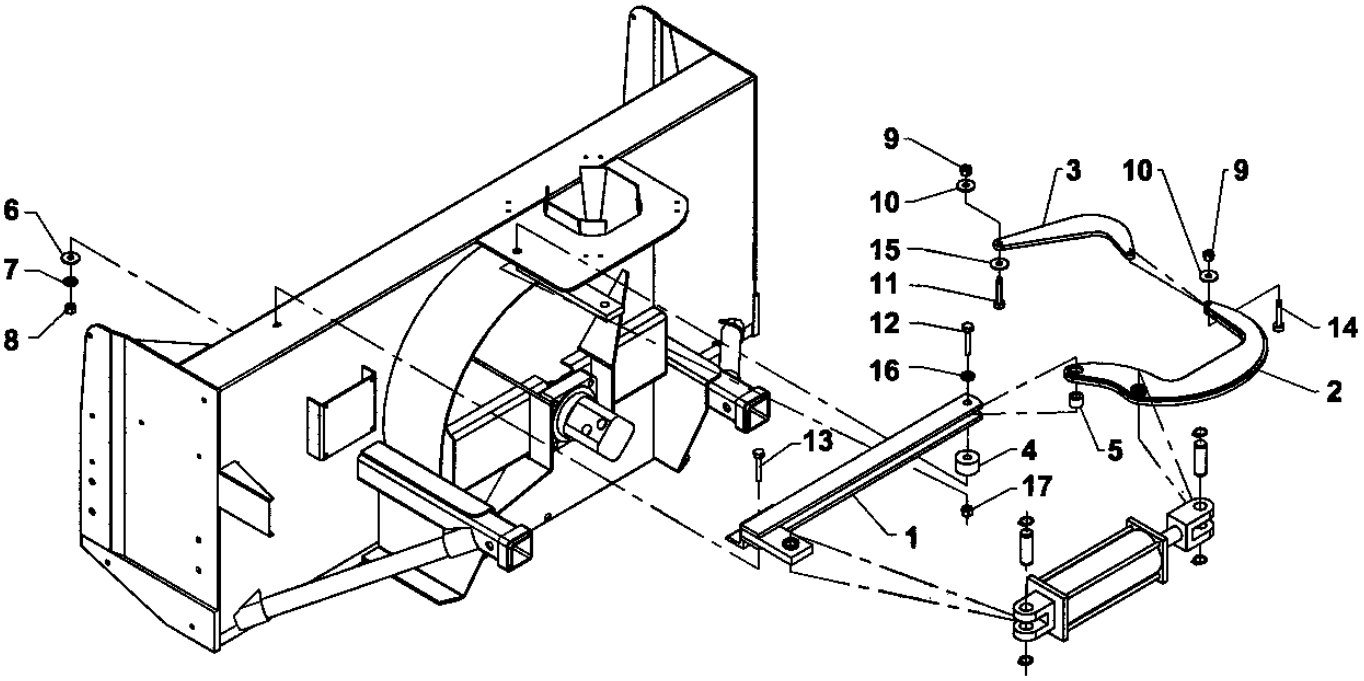

Chute Rotation - H76 (Figure 4)

1. Attach the cylinder support (item 1) on top of the frame with a 3/8"NC x 1" hex. bolt (item 7), ∅7/16'' hole flatwasher , a lockwasher and a nut (items 16-13-17).

2. Install the bell crank (item 2) by sliding a pivot spacer (item 4) under the cylinder support (item 1). Insert the pivot bushing (item 5) in the bell crank hole (using some sandpaper, remove the paint surplus from the hole until the bushing is inserted easily by hand) and slide it between the flat bars of the cylinder support. Secure in place with a 5/8"NC x 3 1/2" hex. bolt, a lockwasher and a nut (items 8-14-9).

3. Attach the push arm (item 3) by inserting it between the chute's welded flat bars. Insert a 3/8" x 3/4", 5/16"NC shoulder bolt (item 12) under and secure with a ∅3/8" hole flatwasher and a 5/16"NC stover nut (item 15-11), making sure the push arm pivots freely.

4. Insert the spacer (item 6) between the bell crank plates and fasten the other end of the push arm on the bell crank using a 3/8" x 3/4" x 5/16"NC shoulder screw (item 10) a 3/8" flatwasher (item 15) underneath and secure with a 3/8" flatwasher and a 5/16"NC stover nut (items 15-11), making sure everything pivots freely

Figure 4

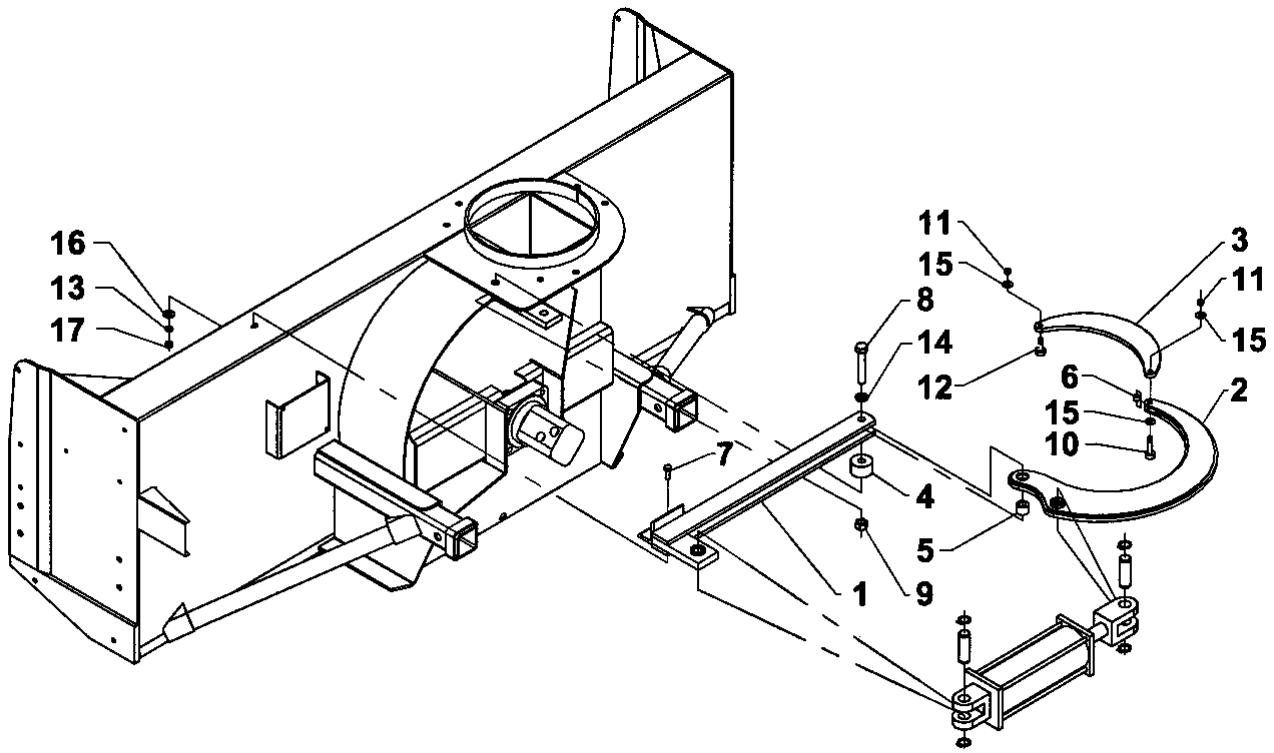

INSTALLATION OF UNIVERSAL HITCH - 8153

1. Attach hitch arms (item 2) to hitch (item 1) using two 3/4" NC x 6" hex. bolts (item 4), 3/4" lockwashers (item 9) and 3/4" hex. nuts (item 11).
2. Insert hitch (item 1) in the snowblower tubes and secure with 3/4" NC x 3 1/2" hex. bolts (item 5), 3/4" lockwashers(item 9). 3/4" NC hex. nuts (item 11).
3. Place longest end of upper bracket (item 3) under the snowblower bracket. Secure using a 5/8" NC x 2" hex. bolt (item 6) on the snowblower and a 5/8" NC x 1 1/2" hex. bolt (item 7) on the hitch. Secure with a 5/8" lockwasher (item 8) and a 5/8" hex nut (item 10).

Figure 5

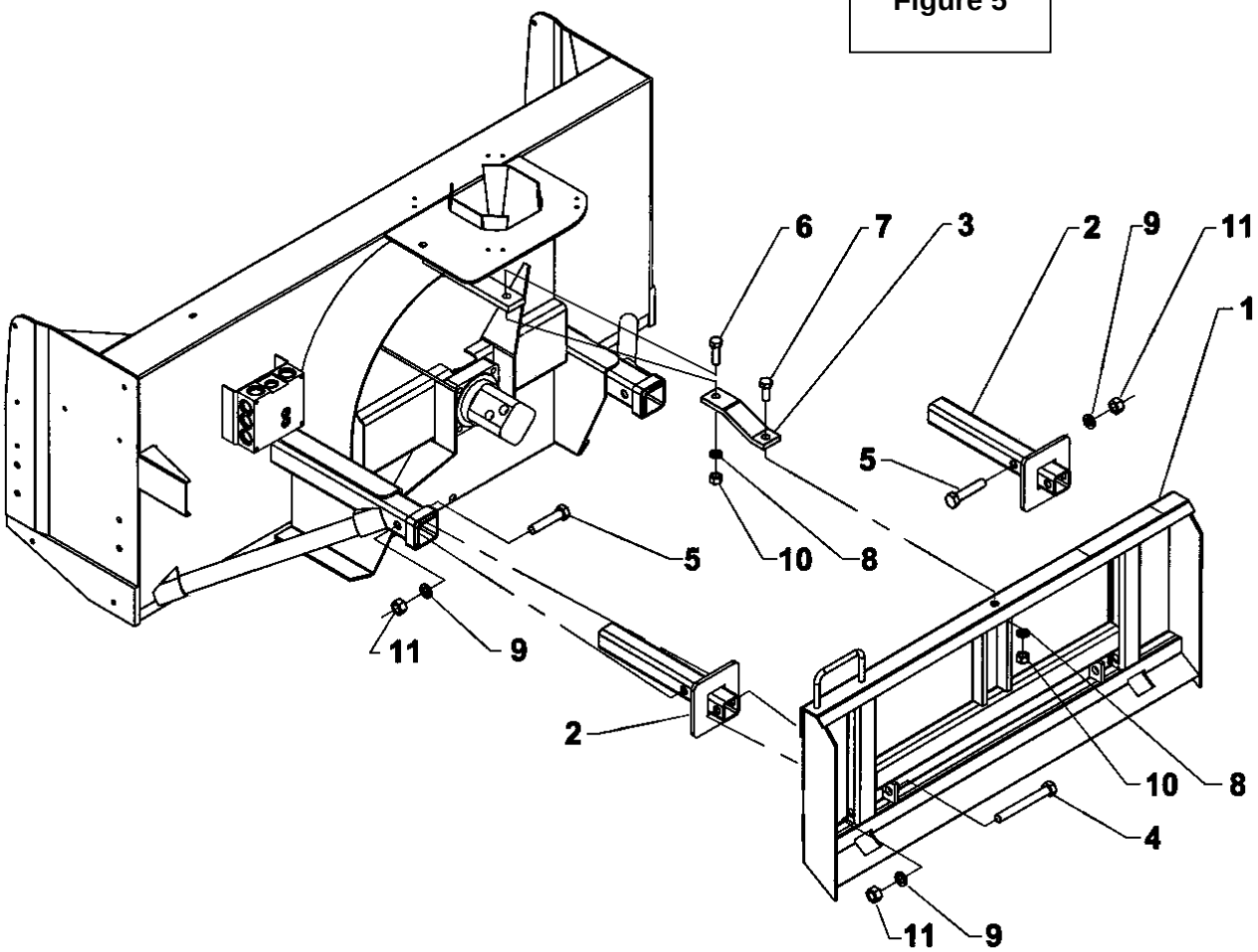

INSTALLATION OF DRIFT CUTTERS - 8152

1. Remove the 1/2" NC x 1 1/2" bolt (item 5) from the motor support (item 17) and the 5/16" NC x 1 1/4" bolt (item 4) from the hose guard (item 16).
2. Position the left drift cutter (item 2) next to the holes in the housing and reinstall the 1/2" NC x 1 1/2" bolt (item 5), 9/16" flatwasher (item 8), 1/2" lockwasher (item 9) and 1/2" NC nut (item 10) in the lower hole.
3. In the middle hole, reinstall the 5/16'' NC x 1 1/4" bolt (item 4), 5/16" flatwasher (item 11), 5/16" lockwasher (item 12) and 5/16" NC nut (item 13).
4. In the upper hole, insert a 3/8" NC x 1" bolt (item 3), 3/8" lockwasher (item 14) and 3/8" NC nut (item 15).
5. Position the right drift cutter (item 1) next to the holes in the housing and secure in place using the 3/8" NC x 1" upper bolt (item 3), 3/8" lockwasher (item 15) and 3/8" NC nut (item 14).
6. Make sure that the right drift cutter is aligned with the housing and drill a 11/32" hole in the housing, using the right drift cutter's (item 1) middle hole as a template. Insert a 5/16" NC x 1" bolt (item 6), 5/16" lockwasher (item 12) and 5/16" NC nut (item 13).
7. Drill a 17/32" hole in the housing using the lower hole in the right drift cutter item 1). Insert a 1/2" NC 1 1/4" bolt (item 7), 1/2" lockwasher (item 9) and 1/2" NC nut (item 10).

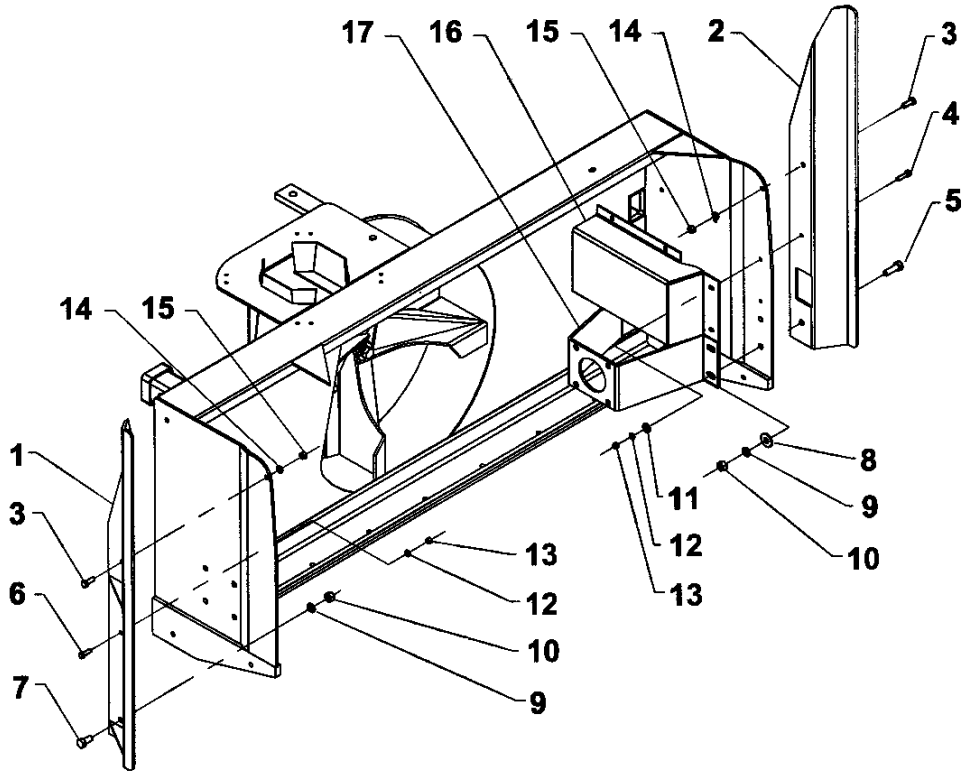

HYDRAULIC ROTATION - 8183 - *(3" x 8" Cylinder – 8150) (Figure 8)*

NOTE: Refer to the Diagram of Hydraulic & Electrical Circuits at all times..

1. Shut engine off and remove the ignition key.
2. Install the 3'' x 8'' cylinder (item 1) on the rotation system with the cylinder ports pointing down and the cylinder rod pointing toward the rotation bell crank. Secure the cylinder yokes with two 1" pins (item 2) and four hairpins (item 24).
3. Install the manifold (item 27) on the left side (position "A") of the snowblower using two #10-24 x 1 1/4" socket head cap screw and #10-24 nylon insert locknuts (items 25-26).
4. Install the 9/16" ORB male x 9/16" JIC male adapters (item 10) on each manifold port (item 27). ATTENTION: In order to distinguish adapters and flow restrictors, refer to the figure below.

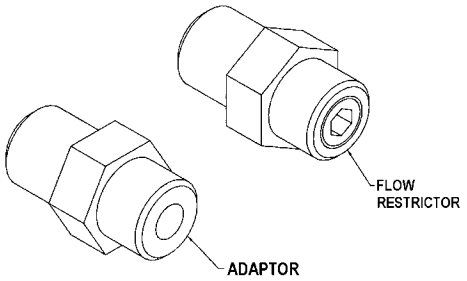

5. Place the 9/16" fitting of the 1/4" x 22 1/4" hose (item 8) on port "T" of the manifold (item 27) and the bent fitting of the 1/4" x 24" hose (item 7) on port "P". Do not tighten immediately.
6. On the upper port "A", install the 1/4" x 27" hose (item 5) and on the lower port "B", the 1/4" x 34" hose (item 6). Do not tighten immediately.
7. Place a 1/2" x 1/4" NPT teflon-coated adapter (item 9) on each cylinder port. Connect the 1/4" x 27 teflon-coated hose (item 5) on the piston side of the cylinder (item 1) and the 1/4" x 34" teflon-coated hose (item 6) on the rod side.
8. Insert a flow restrictor (item 28) on the front of the snowblower manifold (item 3). Connect the 1/4" x 24" teflon-coated hose (item 7). Do not tighten immediately.
9. Insert 7/16" ORB male x 7/16" JIC male adapter (item 12) on the side of the snowblower manifold (item 3). Connect 1/4" x 22 1/4" (item 8). Do not tighten immediately.
10. Tighten all the hoses once they are properly positioned.

Figure 7

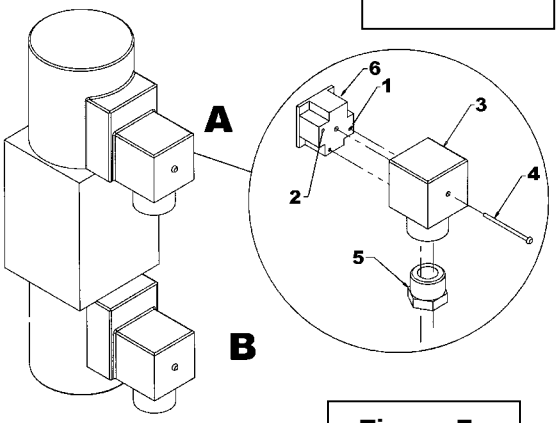

Figure 7a

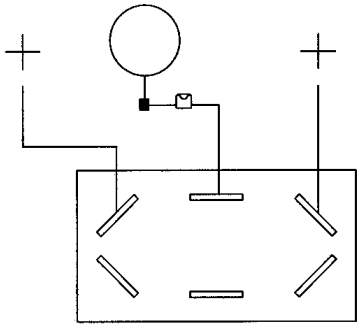

11. Assemble the electro-hydraulic valve (item 4) with the manifold (item 27), using the socket head capscrews supplied with the electro-hydraulic valve.

12. Connect the two 360" white wires (item 15) to the terminals at each end of the switch (item 18) and the 72" white wire (item 17) in the center of the switch, (Refer to fig. 7a).

NOTE: The wires must be connected to the 3 terminals on the same side of the switch (see figure 7a).

13. Install the switchbox (item 20) on the machine where it will be easily accessible during snowblower operation using three self-drilling screws (item 22). Avoid placing the switch box where wires are already installed as they could be damaged.

NOTE: The fourth self-drilling screw will be used later.

14. Remove the switch's lockwasher and insert the switch (item 18) inside the switchbox. Set in place with the nut. Install the plastic cap (item 21) on the other switchbox hole if required and place the rubber cap (item 19) on the switch. Bring the wires toward the snowblower.

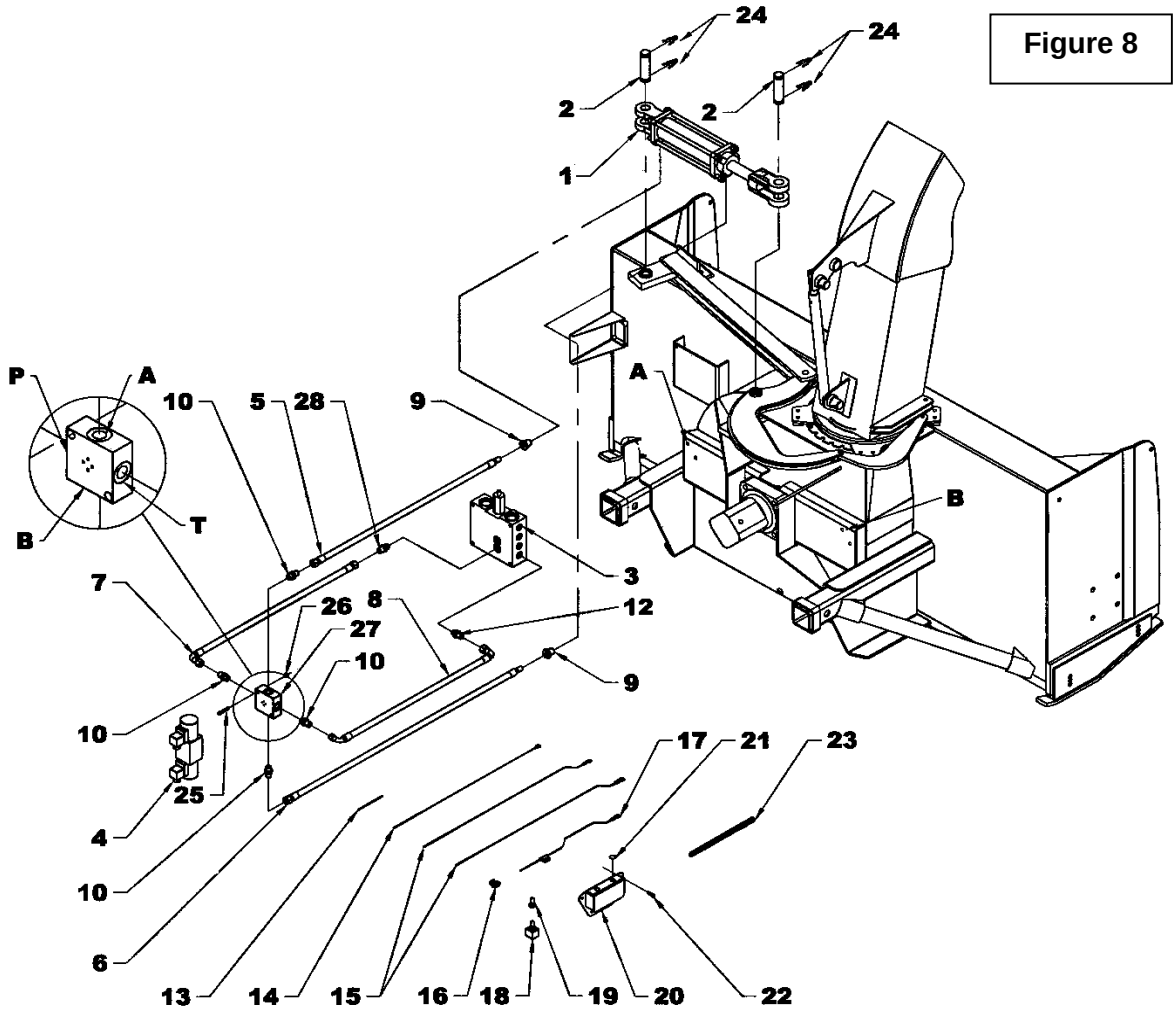

Figure 8

15. Remove the valve's (Fig. 8, item 4) connection case "A" (Fig. 7, item 3) of) by completely removing the front screw (Fig. 7, item 4) and remove the bottom plug (Fig. 7, item 5). Using a small screwdriver, remove the connection block (Fig. 7, item 6) by inserting the screwdriver in the plug hole (Fig. 7, item 5) and pushing lightly on the connection block. Insert a 360" white wire (Fig. 8, item 16) in the hole identified #1 (Fig. 7, item 1) and a black 9" wire (Fig. 8, item 13) in the hole identified #2 (Fig. 7, item 2) and run the wires through the case plug (Fig.7, follow the ghost lines).

16. Reinstall the block (Fig. 7, item 6) in the case (Fig. 7, item 3) so the wires point down to avoid water infiltrations (see Figure 7).

17. Put the case back on the valve (Fig. 8, item 4) and fasten with the screw (Fig. 7, item 4). Reinstall the plug (Fig. 7, item 5).

18. Remove connection case "B" and insert a 360" white wire (Fig. 8, item 15) in the hole identified #1 (Fig. 7, item 1). Insert the end of the 9" black wire (Fig. 8, item 13) connected to case "A" as well as the black 360" wire (Fig. 8, item 14) in the hole identified #2 (Fig. 7, item 2) and run the wires through the case plug (Fig.7, follow the ghost lines). Reinstall the block in the case so the wires point down to avoid water infiltrations.

19. Put the case back on the valve and fasten with the screw. Reinstall the plug.

20. Bring the 360" black wire (Fig. 8, item 14) to the switchbox (item 18) through the same course used to bring the white wires (item 15) from the tractor to the snowblower and fasten the eye terminal to the switchbox using the fourth #10 x 1/2" self-drilling screw (Fig. 8, item 22).

21. Connect the fuse wire (Fig. 8, item 20) to the tractor's ignition switch wire using the tap connector (Fig. 8, item 17).

22. Place a loom (item 23) around all wires to protect them.

23. Secure the loom with tie wraps making sure to leave it loose enough to compensate for the movement of the tractor's articulations.

Diagram of Hydraulic and Electrical Circuits

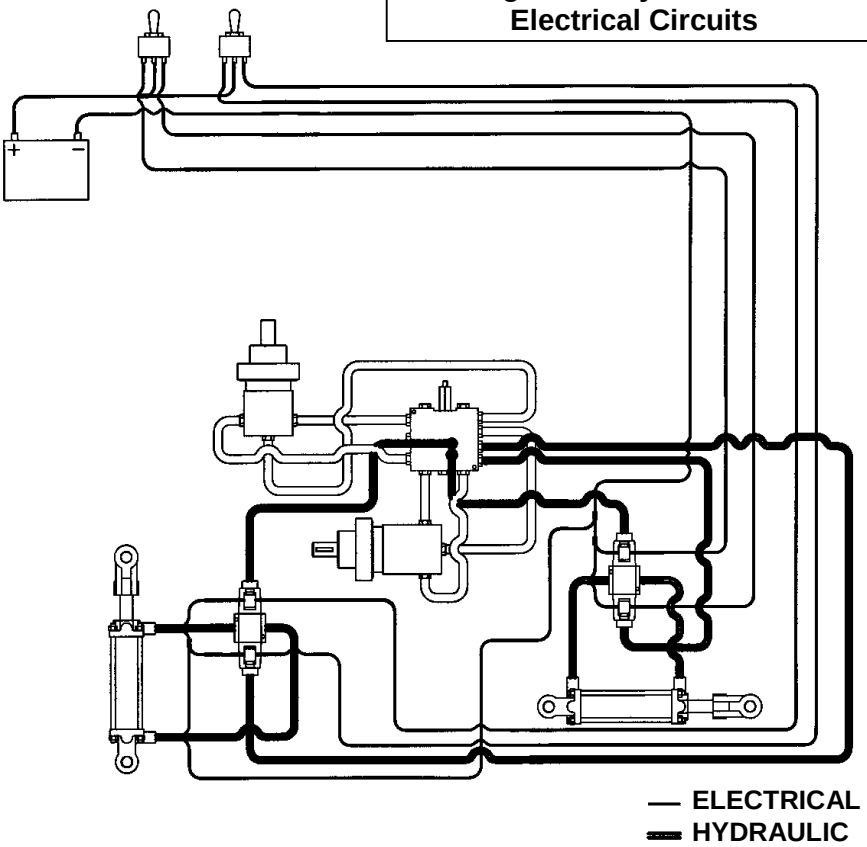

HYDRAULIC DEFLECTOR 8184 – *64": CYLINDER 2" X 6" KIT 8155*
– *76": CYLINDER 3" X 8" KIT 8150*

NOTE: Refer to the Diagram of Hydraulic & Electrical Circuits at all times.

1. Shut engine off and remove the ignition key
2. **(FIGURE 9) For a 64" snowblower:** Install the 2'' x 6'' cylinder (item 1) in the hole farthest from the chute pointing the cylinder rod up and the clevis bolt toward the exterior. Block the cylinder clevis with two 1" pin (item 2) and 4 hairpins (item 13).
3. **(FIGURE 10) For a 76" snowblower:** Install the 3'' x 8'' cylinder (item 1) on the pointing the cylinder rod up and the clevis bolt toward the exterior. Block the cylinder clevis with two 1" pin (item 2) and 4 hairpins (item 13).
4. **(FIGURE 9A)** Remove a hairpin (item 3) on the 1" pin (item 2) located on the rod end of the rotation cylinder, Insert the hose support (item 4) in the 1" pin and reinstall the hairpin.
5. **(FIGURE 9 or 10 depending on the snowblower model, H64 or H76)** Install the 9/16" ORB male x 9/16" JIC male adapters (item 10) on each manifold port (item 26). ATTENTION: In order to distinguish adapters and flow restrictors, refer to the figure below.

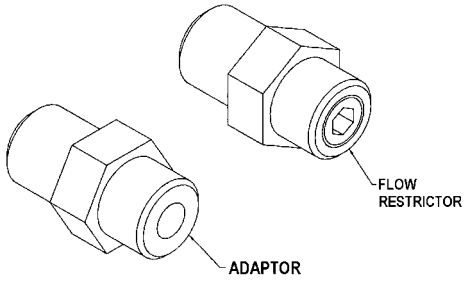

6. Install the manifold (item 26) on the right side (position "B") of the snowblower using two #10-24 x 1 1/4" socket head capscrew and #10-24 nylon insert nut (items 25-27)
7. Place the 9/16" fitting of the 1/4" x 45" hose (item 7) on the manifold's port "T" du (item 4) and the bent fitting of the 1/4" x 37" hose (item 6) on port (P). Do not tighten immediately.
8. On upper port "A" and lower port "B", install a 1/4" x 83" hoses (item 5) on each 9/16" x 9/16" adapter (item 10 Do not tighten immediately.

Hose Installation 2" x 6" cylinder (H64) (Figure 9):

9. Install the teflon coated male NPT end of the 90° elbow (item 9) in each cylinder port (item 1). See figure 10A for position of elbows.

10. Attach the teflon coated 3/8 NPT end of the 1/4" x 83" hose (item 5) connected on top of the valve (item 4) to the upper cylinder port (item 1) inserting first in the hose support (fig, 9A, item 4). Connect the other 1/4" x 83" (item 5) hose in the other cylinder port inserting it first in the hose support (fig, 9A, item 4). Do not tighten immediately.

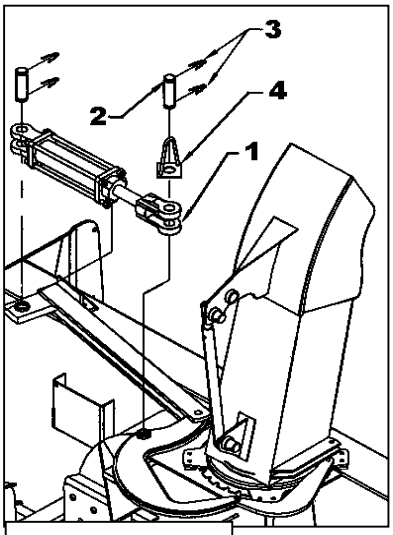

Figure 9A

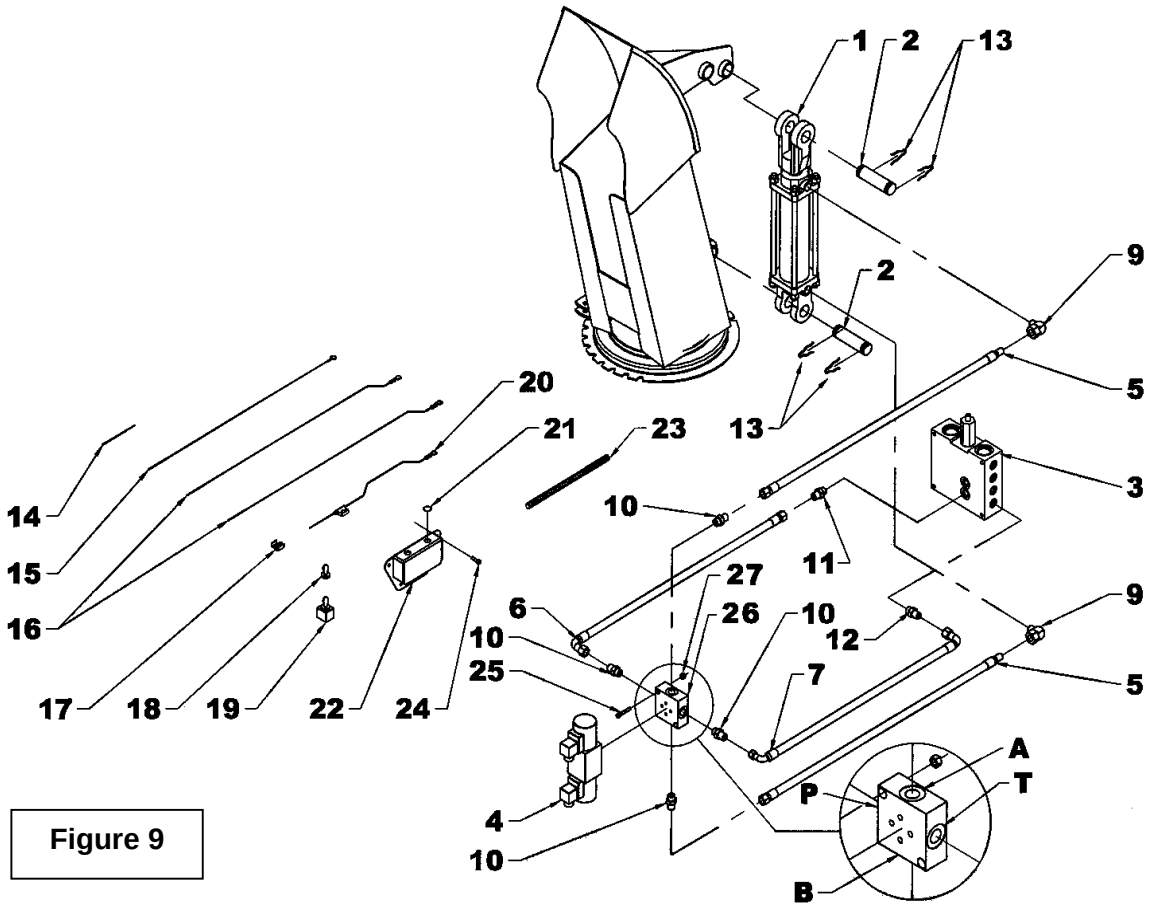

Figure 9

Hose Installation 3" x 8" cylinder (H76) (Figure 10):

11. Install a teflon coated 1/2" male x 3/8" fem. adapters (item 8) on each cylinder port (item 1) and the teflon coated male NPT end of a 90° elbow (item 9) on each reducer (item 8). See figure 10A for postions of elbows

12. Attach the teflon coated 3/8 NPT end of the 1/4" x 83" hose (item 5) connected on top of the valve (item 4) to the upper cylinder port (item 1) inserting first in the hose support (fig, 9A, item 4). Connect the other 1/4" x 83" (item 5) hose in the other cylinder port inserting it first in the hose support (fig, 9A, item 4). Do not tighten immediately.

Figure 10A

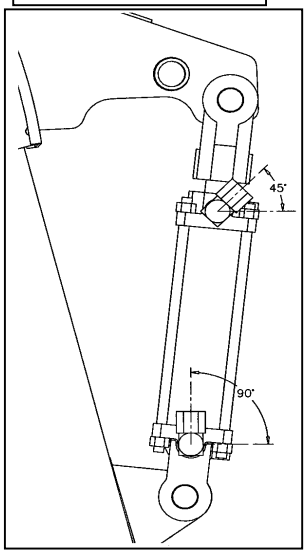

Figure 10

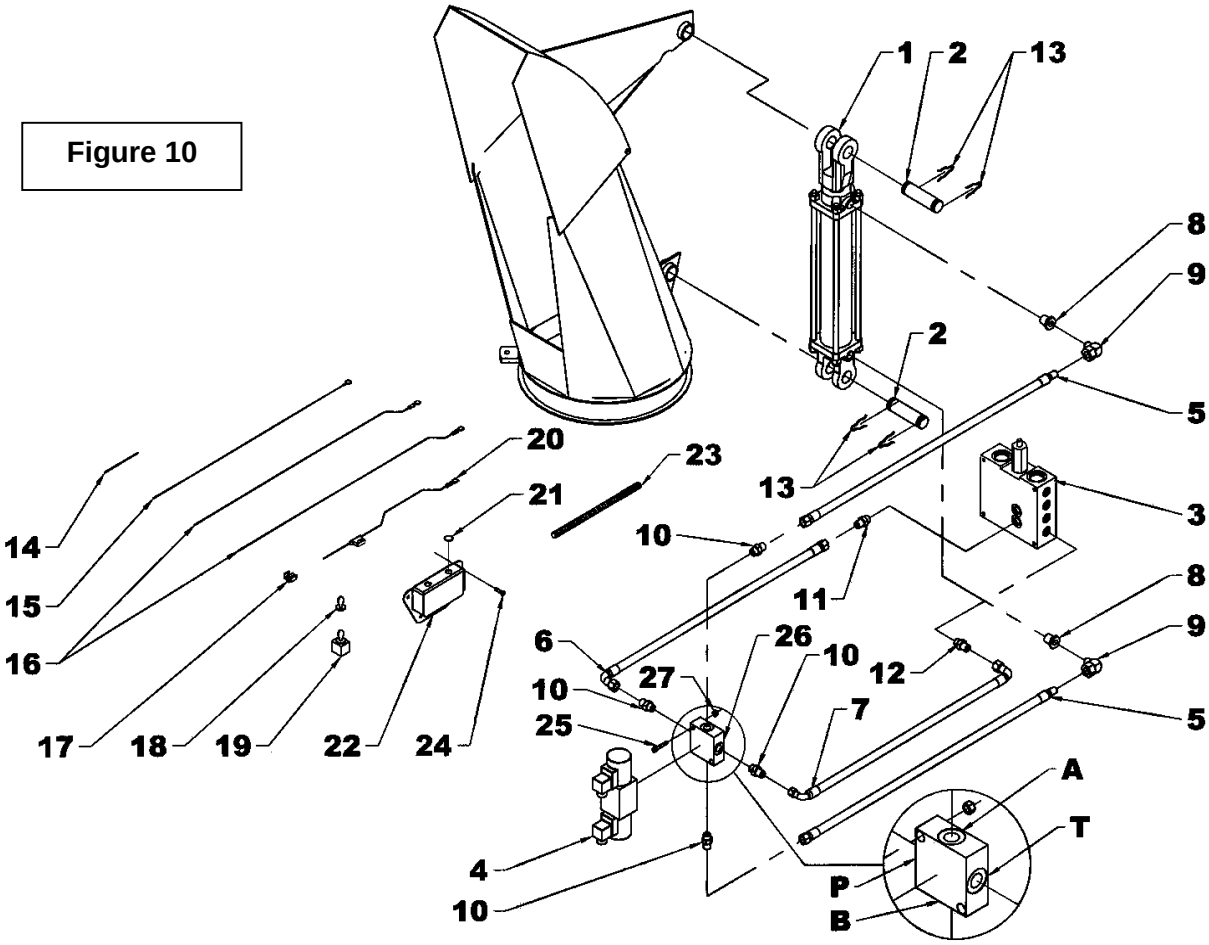

(Figure 9 or 10) H64 & H76:

13. Insert a flow restrictor (item 11) on the front of the snowblower manifold (item 3) and connect the 1/4" x 37" hose (item 6). Do not tighten immediately.

14. Insert a 7/16" ORB male x 7/16" JIC male adapter (item 12) on the side of the snowblower manifold (item 3) and connect the 1/4" x45" hose (item 7). Tighten all the hoses making sure they are positioned properly.

15. Assemble the electro-hydraulic valve (item 4) with the manifold (item 27), using the socket head capscrews supplied with the electro-hydraulic valve. Tighten all the hoses,

16. Connect the two 360" white wires (item 16) to the terminals at each end of the switch (item 19) and the white 72" wire (item 20) in the middle of the switch as shown on figure 11a.

NOTE: The wires must be connected to the 3 terminals on the same side of the switch.

17. Install the switchbox (item 22) on the machine where it will be easily accessible during snowblower operation using three self-drilling screws (item 24). Avoid placing the switch box where wires are already installed as they could be damaged.

NOTE: The fourth self-drilling screw will be used later.

18. Remove the lockwasher and insert the switch (item 19) inside the switchbox. Set in place with the nut. Install the plastic cap (item 21) on the other switchbox hole if required and place the rubber cap (item 18) on the switch. Bring the wires toward the snowblower.

19. Remove the valve's (Fig. 9 or 10, item 4) connection case "A" (Fig. 11, item 3) by completely removing the screw on the front of the case (Fig. 11, item 4) and remove the bottom plug (Fig. 11, item 5). Using a small screwdriver, push slowly on the connection block (Fig. 11, item 6) by inserting the screwdriver in the plug hole (Fig. 11, item 5) to remove it from the case (Fig. 11, item 3). Insert a white 360" wire (Fig. 9 or 10, item 16) in the hole identified as #1 (Fig. 11, item 1) on the connection block (detail, item 6) and a black 9" wire (Fig. 9 or 10, item 14) in the hole identified #2 (Fig. 11, item 2) and run the wires through the bottom plug (Fig.11, follow the ghost lines).

20. Put the block case (Fig.11, item 6) back in the case (Fig.11, item 3) so the wires point down to avoid water infiltrations (see Figure 11). Put the case back on the valve (Fig. 9 or 10, item 4) and secure with the screw (Fig.11, item 4). Put the bottom plug back in place (detail, item 5).

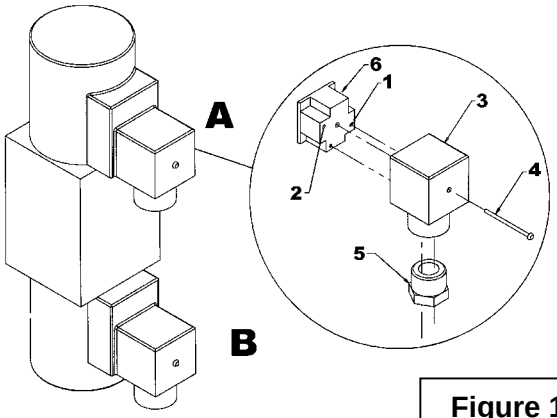

Figure 11

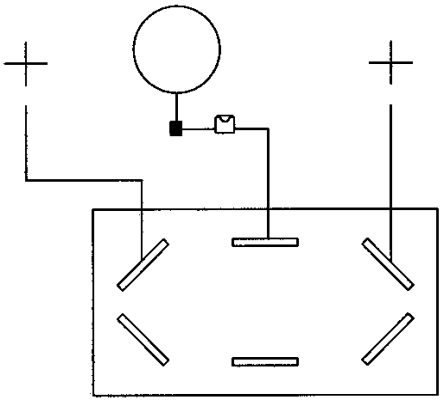

Figure 11A

21. Remove connection case "B" and insert a 360" white wire (Fig.9 or 10, item 16) in the hole identified #1 (Fig.11, item 1) of the connection block (Fig.11, item 6). Insert the 9" black wire (Fig.9 or 10, item 14) of case "A" as well as the 360" black wire (Fig. 9 or 10, item 15) in the hole identified #2 (Fig. 11, item 2). Run the wires through the case plug (Fig.11, follow the ghost lines).

22. Put the case back on the valve (Fig. 9 or 10, item 4) and secure with the screw (Fig.11, item 4). Put the bottom plug back in place (detail, item 5).

23. Bring the 360" black wire (Fig. 9 or 10, item 15) to the switchbox (item 19) through the same path used to bring the white wires (item 16) from the tractor to the snowblower and fasten the eye terminal to the switchbox using the fourth #10 x 1/2" self-drilling screw (Fig. 9 or 10, item 24).

24. Connect the fuse wire (Fig. 9 or 10, item 20) to the tractor's ignition switch wire using the tap connector (Fig. 9 or 10, item 17).

25. Place a loom (item 23) around all wires to protect them.

26. Secure the loom with tie wraps making sure to leave it loose enough to compensate for the movement of the tractor's articulations.

27. Fasten the two cylinder hydraulic hoses together with tie wraps and check to ensure they do not get stuck in the chute's rotation mechanism.

Diagram of Hydraulic and Electrical Circuits

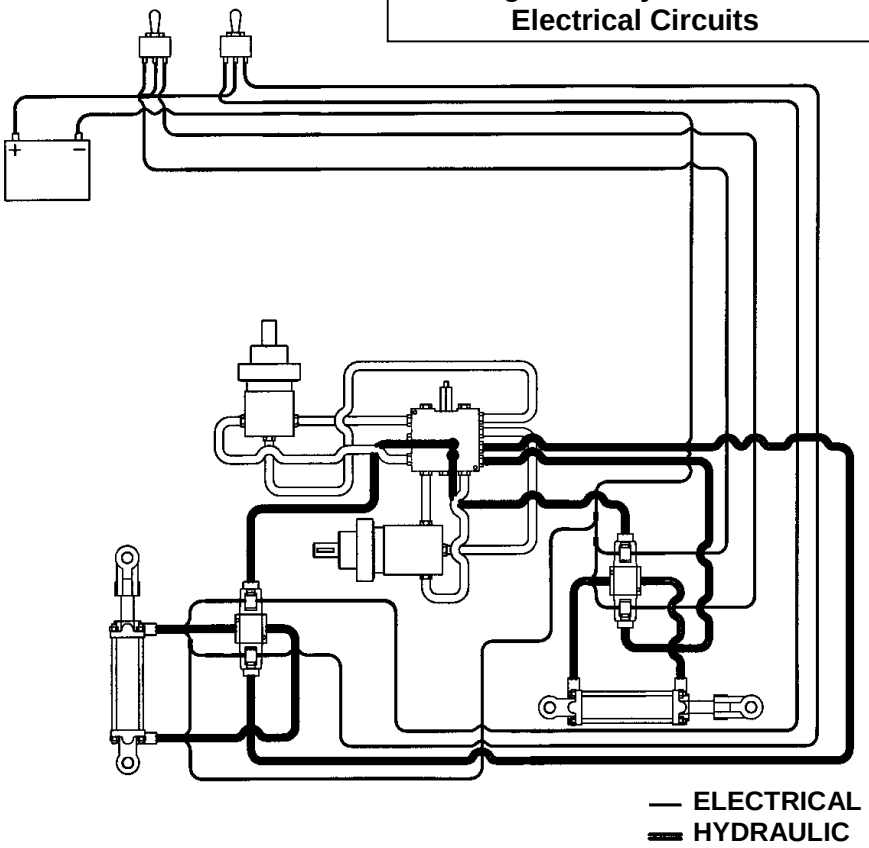

8151 *- Electric Rotation for H64-H76 &*

- Electric Deflector for H76 (Figure 12 & Electrical Diagram)

1. Shut off the engine and remove the ignition key.
2. Install the clevis (items 6-7) on the actuator (item 1A or 1B) and attach using a 1/2" NC x 2 1/2" bolt (item 16) and a 1/2" NC nylon insert locknut (item 17).
3. Install a 3/16" x 1 3/4" spring pin (item 13) on each 1" pin (item 8).
4. Install the actuator on the chute or the rotation (see Figure 12 for actuator position), using two 1" pins (item 8) and secure with a 4mm x 80mm hairpin (item 14).
5. Connect the ground wire (item 9, black 72") to terminal "C" on switch (item 3).
6. Connect fuse wire (item 11, red 72") to terminal "B" on switch (item 3).
7. Connect actuator wires (item 12, 1 red and 1 black 360") to terminal "A" and "D" on switch (item 3).
8. If you have an electric rotation or an electric deflector, repeat the steps from the beginning but use the same switch box for both switches.
9. Install the switch box (item 2) at a convenient location for easy access when operating the snowblower. Secure using three #10 x 1/2" self-drilling screws (item 15). Leave a hole to install the ground wire. Avoid placing the switch box where wires are already installed as they could be damaged.
10. Unscrew the nut and remove the lockwasher from the switch. Insert switch (item 3) in the switch box. Tighten the switch with its nut. Place the plastic cap (item 5) over the free hole in the switch box (if necessary) and screw the rubber cap (item 4) on the switch.
11. Connect the black ground wire's eye terminal (item 9) to the fourth #10 x 1/2" screw (item 15) and screw in the free hole of the switch box (item 2).
12. Connect the fuse wire (item 11) to the tractor ignition switch wire using the tap connector (item 10).
13. Connect the actuator wire (item 12) to the electric actuator (item 1A or 1B).
14. Place a loom (item 18) around all wires to protect them. Secure the loom using tie wraps.

Figure 12

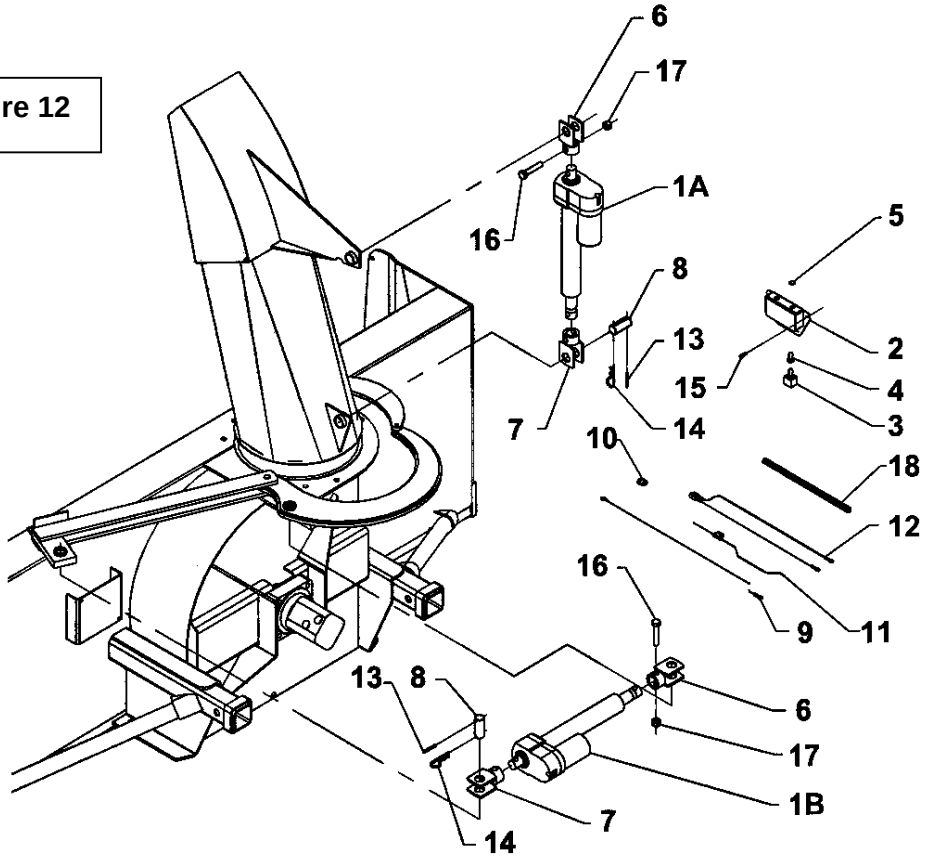

Electrical Diagram

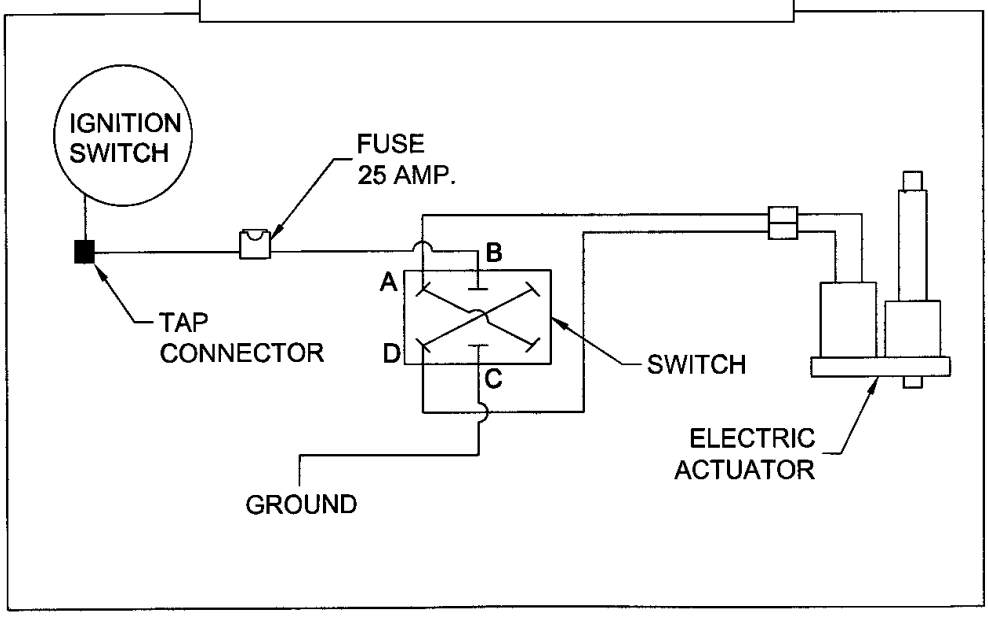

8154 – Electric Deflector for H64 (Figure 13 & Electrical Diagram)

15. Shut off the engine and remove the ignition key.

16. Install the clevis (items 6-7) on the actuator (item 1) and attach using a 1/2" NC x 2 1/2" bolt (item 16) and a 1/2" NC nylon insert locknut (item 17).

17. Install a 3/16" x 1 3/4" spring pin (item 13) on each 1" pin (item 8).

18. Install the actuator on the chute (see Figure 13 for actuator position) using two 1" pins (item 8) and secure with a 4mm x 80mm hairpin (item 14).

NOTE: The base end of the electric actuator attaches in the hole closest to the chute (as shown on figure 13).

19. Connect the ground wire (item 9, black 72") to terminal "C" on switch (item 3).

20. Connect fuse wire (item 11, red 72") to terminal "B" on switch (item 3).

21. Connect actuator wires (item 12, 1 red and 1 black 360") to terminal "A" and "D" on switch (item 3).

22. If switch box is already installed for the electric rotation, go to step 8. If not, install the switch box (item 2) at a convenient location for easy access when operating the snowblower. Secure using three #10 x 1/2" self-drilling screws (item 15). Leave a hole to install the ground wire. Avoid placing switch box where wires are already installed as they could be damaged.

23. Unscrew the nut and remove the lockwasher from the switch. Insert switch (item 3) in the switch box. Tighten the switch with its nut. Place the plastic cap (item 5) over the free hole in the switch box (if necessary) and screw the rubber cap (item 4) on the switch.

24. Connect the black ground wire's eye terminal (item 9) to the fourth #10 x 1/2" screw (item 15), and screw to the free hole of the switch box (item 2).

25. Connect the fuse wire (item 11) to the tractor ignition switch wire using the tap connector (item 10).

26. Connect the actuator wires (item 12) to the electric actuator (item 1).

27. Place a loom (item 18) around all wires to protect them. Secure the loom using tie wraps.

Figure 13

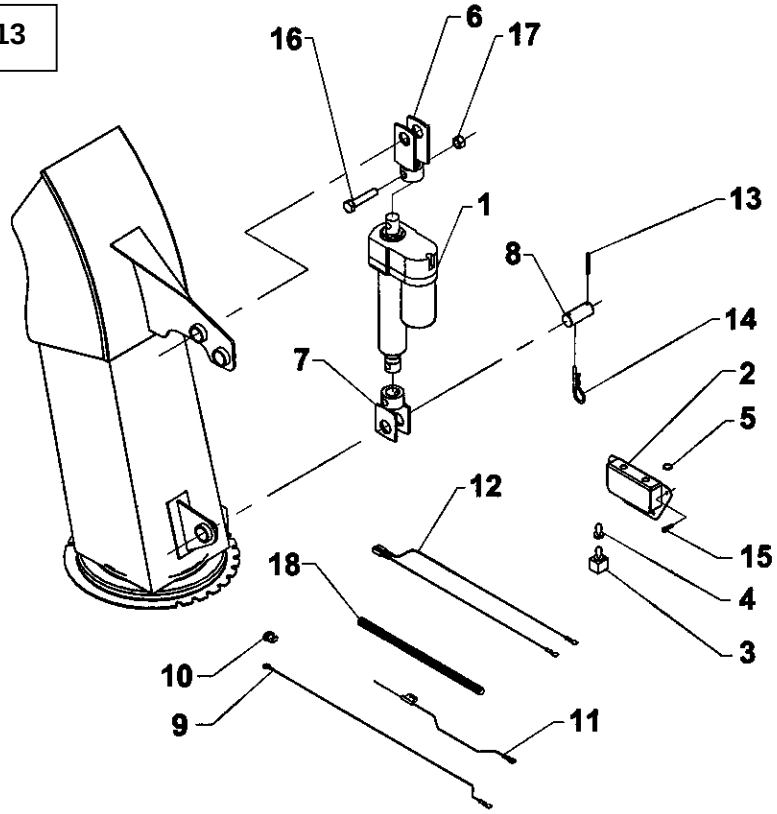

Electrical Diagram

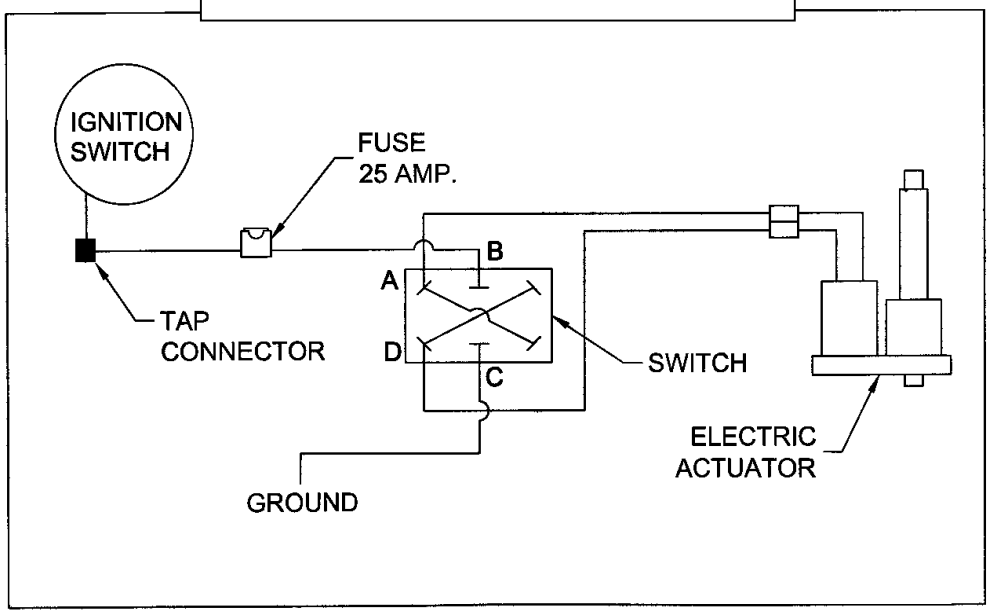

GENERAL PREPARATION

1. Read the operator's manual carefully before using the tractor and snowblower. Be thoroughly familiar with the controls and proper use of the equipment. Know how to stop the unit and disengage the controls quickly.
2. Wear adequate winter outer garments while operating equipment.
3. Make sure the snowblower is clear of snow before engaging the hydraulic system.
4. Make sure the auger and fan operate freely.
5. Adjust the skid shoes so the snowblower run level.
6. To obtain maximum efficiency of the snowblower, the oil in the hydraulic system must be warmed up for 10 to 15 minutes.

OPERATING CONTROLS

Manual Deflector Adjustment

Set the angle of the deflector according to the distance the snow must be thrown. To set the deflector angle, remove the hairpin from the adjustment tube, adjust the deflector to the appropriate angle and replace the hairpin.

Hydraulic or Electric Deflector Adjustment

IMPORTANT: The snowblower's drive system must be engaged to move the hydraulic deflector.

To adjust the angle of the deflector, move the switch forward or to the left to lower the deflector. Move the switch rearward or to the right, to raise it. If the operation is not as described, reverse the switch wires.

Hydraulic or Electric Rotation Adjustment

IMPORTANT: The snowblower's drive system must be engaged to rotate the hydraulic chute.

To turn the chute left (counterclockwise), move the switch forward or to the left to lower the deflector. Move the switch rearward or to the right, to move the chute to the right (clockwise). If the operation is not as described, reverse the switch wires.

Work and Travel Speed

Working ground speed will depend on the thickness and density of the snow to be cleared. Normally, ground speed will range from 4 to 7 MPH for light, dry snow 3 to 6 inches thick, and 1 to 3 MPH for heavy, wet or icy snow. To transport, disengage the hydraulic system and raise the snowblower to full transport height.

Skid Shoes Adjustment

Adjust the snowblower so that the skid shoes run level and according to the surface conditions so that stones are not thrown with the snow. Adjust both skid shoes to the same height to keep the cutting edge level and adjust upwards for smooth surfaces.
Remove skid shoe bolts and adjust according to instructions below :

Clearance between cutting edge and surface

- Level paved surface: Adjust in lower hole
- Slightly uneven surface: Adjust in middle hole
- Uneven or gravel surface: Adjust in upper hole

IMPORTANT: Avoid overloading the snowblower or driving it in reverse for too long. Driving the snowblower in reverse now and then to dislodge an object blocking the snowblower is acceptable.

IMPORTANT: The fan and auger are driven directly by hydraulic motors. The shear bolts have been replaced by relief valves.

When an object blocks the fan or the auger, they stop turning. They start turning again when the object is removed.

DANGER: To avoid serious injuries: Keep clear of rotating parts. Do not put hands or feet under, or into snowblower with engine running.

Park the tractor/snowblower on level ground, place the transmission in neutral, set the parking brake, disengage the equipment drive, lower the equipment to the ground, place all control levers in neutral, shut off the engine, remove the ignition key and allow the rotating parts to stop BEFORE unclogging the collector/fan housing or chute, and making any repairs, adjustments or inspections. Use only a 36" long piece of wood to unclog blower.

Not respecting these instruction can result in serious injuries.

SNOW REMOVAL METHODS

When removing snow, do not use the snowblower as a dozer blade to push snow. Let the snowblower work its way through deep drifts. If the speed of your tractor is too fast, the snowblower may become overloaded and clog. For best results, raise the snowblower and remove a top layer of snow. A second pass with the snowblower will remove the remaining snow.

IMPORTANT: Use full engine RPM when removing wet, sticky snow. Low engine RPM will tend to clog the chute.

WARNING: To avoid serious personal injury: Do not use hands or feet to unclog chute. Do not attempt to clear clogged chute of snow while tractor engine is running. If the chute clogs, disengage the drive shaft, shut off the tractor engine, remove the ignition key, wait for all movement to stop, and then clear the snow from the chute.

A definite pattern of operation is required to thoroughly clean the snow area. These patterns will avoid throwing snow in unwanted places as well as eliminating a second removal of snow

PATTERN 1

DISCHARGE SNOW BOTH SIDES

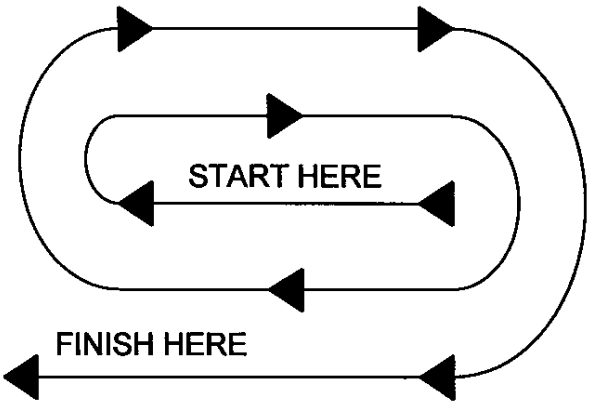

DISCHARGE SNOW BOTH SIDES

PATTERN 2

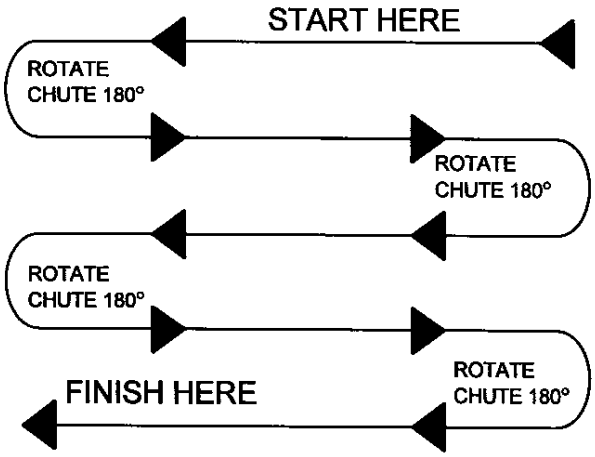

DISCHARGE SNOW THIS SIDE ONLY

Where it is possible to throw the snow to the left and right (above), as on a long driveway, it is advantageous to start in the middle. Plow from one end to the other, throwing snow to both sides without changing the direction of the discharge guide.

If the snow can only be thrown to one side of the driveway or sidewalk (above), start on the opposite side. At the end of the first pass, rotate the discharge guide 180 degrees for the return pass. At the end of each succeeding pass, rotate the discharge guide 180 degrees to maintain direction of throw in the same area.

MAINTENANCE

ALWAYS USE GENUINE PARTS WHEN REPLACEMENT PARTS ARE REQUIRED

Storage

1. Check hardware at regular intervals to ensure it is always tightened properly.
2. Never park the tractor inside a building where an open flame or sparks are present. Allow the engine to cool down before storing in any enclosure**.**
3. Run the snowblower a few minutes after blowing snow to prevent freeze up of auger and fan.

WARNING: Provide adequate blocking before working under the snowblower when in raised position.

Hydraulic Oil

Check oil level before every use. Refer to the tractor's operation's manual for the type of oil to use. By default, use. ISOVG32.

ATTENTION: Escaping hydraulic/diesel fluid under pressure can penetrate the skin causing severe injuries.

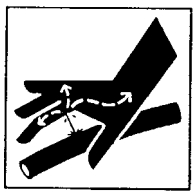

- **Do not use your hands to check for leaks. Use a piece of cardboard or paper to search for leaks.**

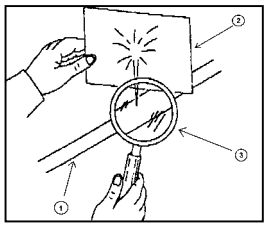

4. **Hydraulic line**
5. **Cardboard**
6. **Magnifying glass**

- **Shut engine off and relieve pressure before connecting or disconnecting lines..**
- **Tighten all connections before starting engine or pressurizing lines.**
- **If any fluid is injected into the skin, obtain medical attention immediately or gangrene may result.**

LUBRICATION

Use a grease gun and lubricate as follows:

DESCRIPTION	INTERVAL	LUBRICATION REQUIRED
Bearing	24 hours of use	Grease the auger bearing
Rotation Bell crank	24 hours of use	Grease the pivots
Hydraulic system	After each use	Check the tractor's oil level
	Once a year	Change the oil
Chute	24 hours of use	Grease the underside of the retaining plates

VERIFICATION

DESCRIPTION	INTERVAL	LUBRICATION REQUIRED
Flow restrictor	50 hours of use	Check that the hole is not obstructed
	200 hours of use	Replace
Hoses	At each lubrication	Check for leaks
Hydraulic motor	At each lubrication	Check for leaks
Hydraulic block	At each lubrication	Check for leaks
Skid shoes Cutting edge	100 hours of use	Check for wear and change if needed
Housing/ Fan/Auger	100 hours of use	Repair if needed
Hardware	24 hours of use	Check and tighten if needed

TROUBLESHOOTING

The optimum performances of the snowblower are only achieved after 10 to 15 minutes of snowblower operation. It is therefore important to ensure that the hydraulic oil reaches a temperature of over 40° C before judging the snowblower's performances.

The snowblower performances are very sensitive to the hydraulic pressure. The higher the pressure is (while remaining under 3300 psi) the more the performances of the snowblower will be high.

The following chart serves as a guide in case of a malfunction. If the problem is not solved after taking the appropriate corrective measure, contact your dealer.

WARNING: Several corrective measures present a certain risk, which may cause serious injuries or death.

Only a qualified person, familiar with the risks associated with hydraulics, electricity and machinery should perform the repairs. Review the safety precautions at the beginning of this manual.

WARNING: Hot motor parts and hydraulic oil can cause serious burns. Always let the engine cool before proceeding with repairs or maintenance.

PROBLEM	CORRECTIVE MEASURE
1. The auger and fan do not turn	• Check if an object is blocking the fan or auger • Check the tractor controls • Check tractor's oil level and add some if needed • Check that the input and output hoses are connected • Check that the input and output hoses are in the right position, if not reverse their position • Check if the flow restrictor is obstructed and replace if needed
2. The auger and fan are revving in reverse	• Check that the hoses are connected correctly to the hydraulic manifold and reverse their position if necessary • Check the tractor controls
3. The snow is not being ejected from the chute	• Check if the fan is revving, refer to problem # 1 • Check if the fan is revving in the right direction, refer to problem # 2 • Check if the snow output is obstructed, unclog with a 36" stick
4. The snowblower clogs up easily	• Check the viscosity of the hydraulic oil • Check tractor's oil level and add some if needed • Check if the engine is revving at full RPM • Check the tractor's hydraulic pressure • Check the tractor's hydraulic flow • Check if the flow restrictor is obstructed and replace if needed • Check if the sequence valve is working and replace in needed

PROBLEM	CORRECTIVE MEASURE
5. Snow doesn't enter the snowblower properly	• Check the viscosity of the hydraulic oil • Check tractor's oil level and add some if needed • Check if the engine is revving at full RPM • Check the tractor's hydraulic pressure • Check the tractor's hydraulic flow • Check is the flow restrictor is worn and replace if needed • Check the motor and auger relief valve • Check if the sequence valve is working and replace in needed
6. The snow is not thrown very far	• The engine is not revving at full RPM • Check tractor's oil level and add some if needed • Check the tractor's hydraulic pressure, adjust if too low • Check the tractor's hydraulic flow • Reduce the travel speed (Refer to Operation section) • Check the hoses for leaks, replace if needed • Check if the flow restrictor is obstructed and replace if needed • Check the motor and fan relief valve • The sequence valve is not adjusted properly, replace if needed
7. The chute or deflector of the hydraulic rotation does not operate	• Check if the snowblower is engaged • Check if the attachments flow restrictor is obstructed, replace if needed • Check if the fuse is burnt • Check if the hoses and wires are connected properly
8. The chute or deflector of the hydraulic rotation is working, but in a erratic way	• The engine is not revving at full RPM • Check for dirt in the oil and replace if needed • Check if the hoses and wires are connected properly • Check if the attachments flow restrictor is obstructed, replace if needed
9. The chute or deflector of the electric rotation does not operate	• Check if the electrical wires and connections are connected properly • Check if the fuse is burnt
10. The chute or deflector of the electric rotation is working, but in a erratic way	• Check if the electrical wires are connected properly • Check the battery's voltage

SPECIFICATIONS

MODEL	H64	H76
Cutting width - in (cm)	64 (162)	76 (193)
Cutting height - in (cm)	26 (66)	26 (66)
Distance between mounting plate and housing - in (cm)	11 1/4 (28)	9 9/16 (24)
Impeller diameter - in (cm)	24 (61)	24 (61)
Impeller depth - in (cm)	6 3/4 (17)	8 7/16 (21)
Number of blades	4	4
Auger diameter - in (cm)	15 (38)	15 (38)
Electric chute rotation	Option	Option
Hydraulic chute rotation	Option	Option
Manual chute deflector adjustment	Standard	Standard
Electric chute deflector adjustment	Option	Option
Hydraulic chute deflector adjustment	Option	Option
Lateral blades-widens cutting width by 6"(15cm)	Option	Option
Replaceable cutting edge	Standard	Standard
Adjustable skid shoes	Standard	Standard
Universal skid steer mounting plate	Option	Option
Fan drive	Moteur hyd.	Moteur hyd.
Auger drive	Moteur hyd.	Moteur hyd.
V.A.C. hydraulic drive system	Standard	Standard
Recommended flow - GPM	12 @ 20	18 @ 25
Recommended pressure - PSI	2100 @ 3300	2100 @ 3300
Approx. weight lbs - (kg)	591 (268)	657 (298)

Specifications are subject to change without notice

PERFORMANCE CHART

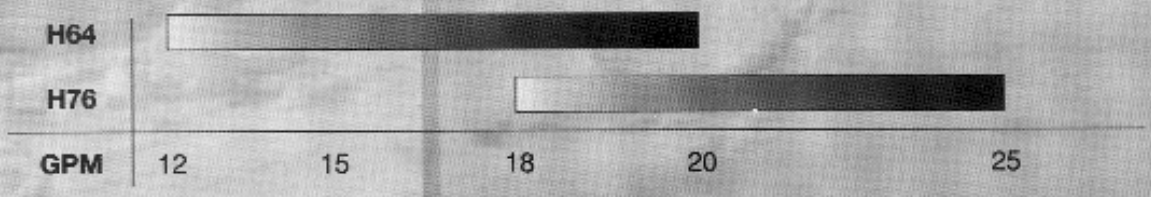

Good Performance Very Good Performance Excellent Performance

INTRODUCTION

All parts are illustrated in "exploded views" which show the individual parts in their normal relationship to each other. Reference numbers are used in the illustrations. These numbers correspond to those in the "Reference Number" (REF) column, and are followed by the description and quantity required.

O/L - "Obtain Locally" in the part number column indicates common hardware that is available at your local hardware supply.

All reference to right and left, forward or rearward, are from the operator's seat, facing the steering wheel.

Orders must give the complete description, correct part number, the total amount required, the serial number, the method of shipment and the shipping address.

The manufacturer reserves the rights to change, modify, or eliminate from time to time, for technical or other reasons, certain or all data, specifications, or the product or products themselves, without any liability or obligation.

HYDRAULIC SNOWBLOWER H64 & H76

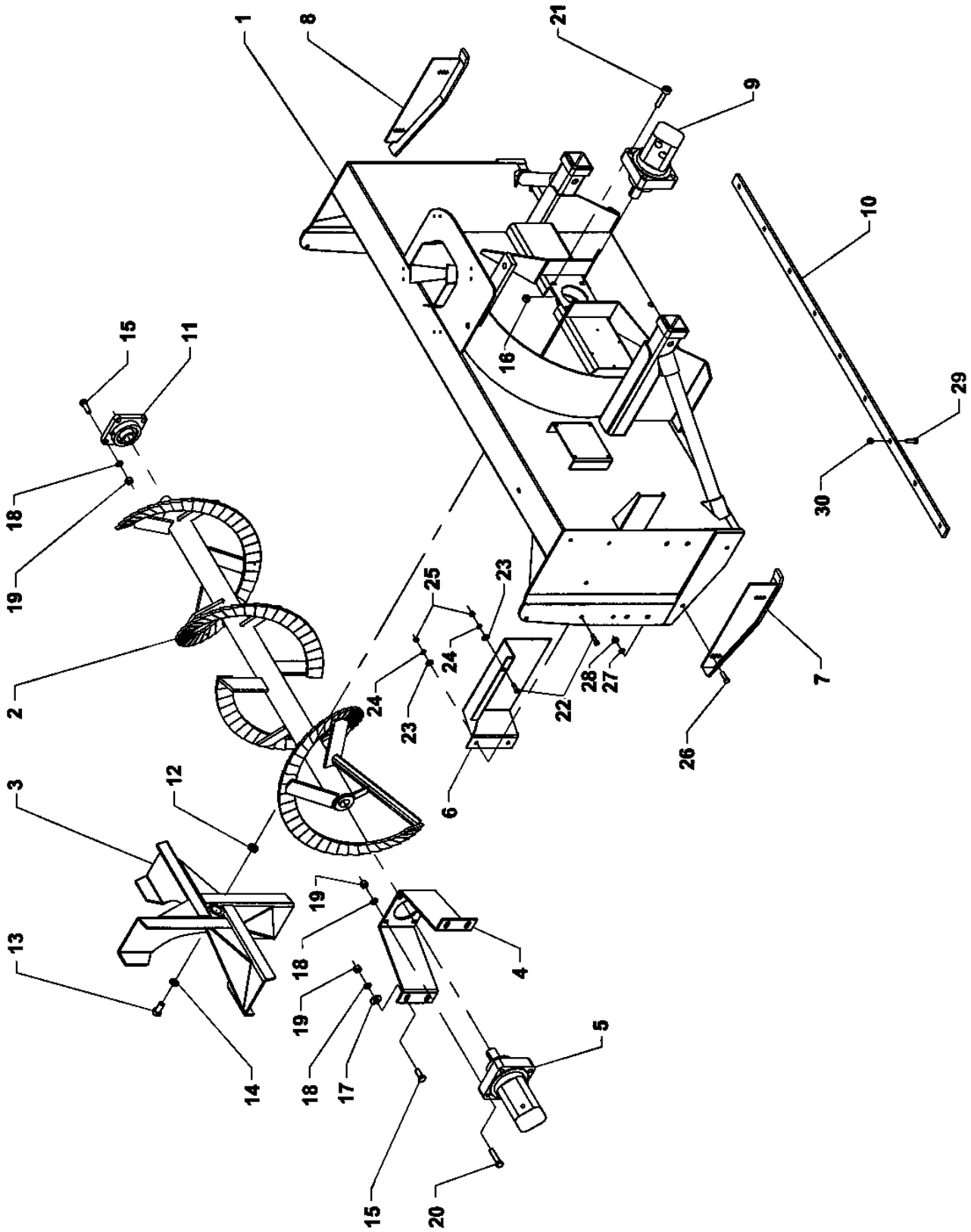

HYDRAULIC SNOWBOWER H64 & H76

REF.	DESCRIPTION	QTY	PART #
1	Housing	1	---
2	Auger 64"	1	665856
	Auger 76"	1	665928
3	Fan 64"	1	665854
	Fan 76"	1	665927
4	Motor support	1	665859
5	Hydraulic motor (auger) 64"	1	3900020
	Hydraulic motor (auger) 76"	1	3900024
6	Hose guard	1	665860
7	Left skid shoe	1	665443
8	Right skid shoe	1	665444
9	Hydraulic motor (fan) 64"	1	3900019
	Hydraulic motor (fan) 76"	1	3900023
10	Cutting edge 64"	1	665857
	Cutting edge 76"	1	665929
11	Bearing 1 1/4"	1	4300001
12	Spacer	1	665858
13	Bolt hex. 5/8"NF x 1 1/4" GR 5, PTD	1	O/L
14	Lockwasher 5/8", PTD	1	O/L
15	Bolt hex. 1/2"NC x 1 1/2" GR 5, PTD	8	O/L
16	Nylon insert locknut 1/2"NC, PTD	4	O/L
17	Flatwasher 9/16", PTD	4	O/L
18	Lockwasher 1/2", PTD	12	O/L
19	Nut hex. 1/2"NC, PTD	12	O/L
20	Bolt hex. 1/2"NC x 2 1/4" GR 5, PTD	4	O/L
21	Allen round head setscrew 1/2"NC x 2 1/2"	4	O/L
22	Bolt hex. 5/16"NC x 1 1/4" GR 5, PTD	4	O/L
23	Flatwasher 5/16", PTD	4	O/L
24	Lockwasher 5/16", PTD	4	O/L
25	Nut hex. 5/16"NC, PTD	4	O/L
26	Carriage bolt 3/8"NC x 1 1/4" GR 5, PTD	4	O/L
27	Lockwasher 3/8", PTD	4	O/L
28	Nut hex. 3/8"NC, PTD	4	O/L
29	Plow bolt 3/8"NC x 1 1/4" GR 5 for 64"	9	O/L
	Plow bolt 3/8"NC x 1 1/4" GR 5 for 76"	11	O/L
30	Stover nut 3/8"NC, PTD for 64"	9	O/L
	Stover nut 3/8"NC, PTD for 76"	11	O/L

HYDRAULIC SYSTEM

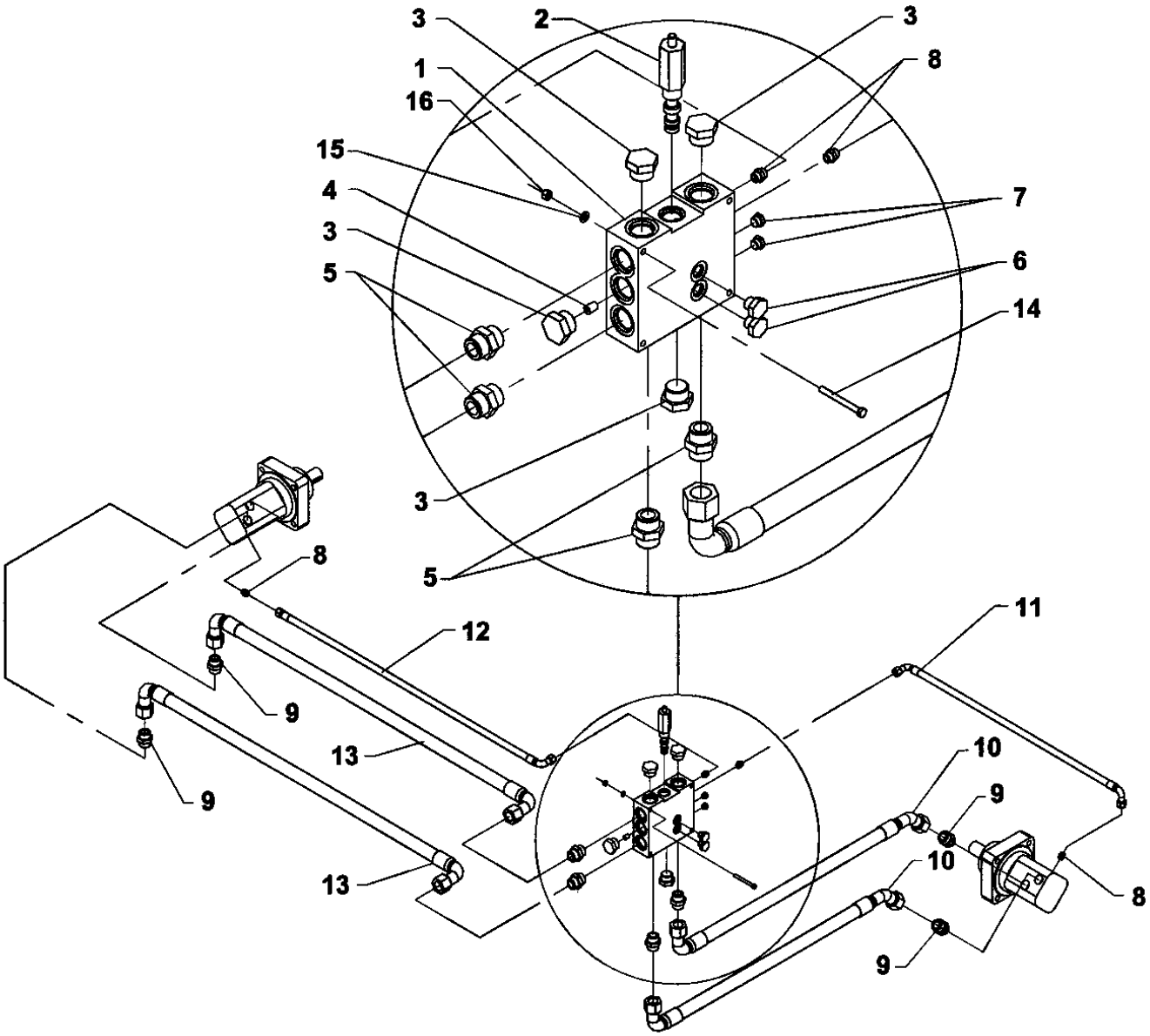

HYDRAULIC SYSTEM

REF.	DESCRIPTION	QTY	PART #
1	Manifold	1	**665872**
2	Sequence valve – for 64"	1	3900072
	Sequence valve – for 76"		3900073
3	Plug 1 1/16" ORB	4	2600049
4	Flow restrictor "	1	665942
5	Connector 1 1/16" male ORB x 1 1/16" male JIC	4	660571
6	Plug 9/16" ORB	2	655730
7	Plug 7/16" ORB	2	2600048
8	Connector 7/16" male ORB x 7/16" male JIC	4	664271
9	Connector 7/8" male ORB x 7/8" male JIC	4	665225
10	Hose 5/8" x 32 1/2", 1 1/16"JIC swivel fem. short bend 90 x 7/8"JIC swivel fem. short bend 45	2	665906
11	Hose 1/4" x 28 1/8", 7/16"JIC swivel fem. short bend 90 x 7/16"JIC swivel fem. short bend 90	1	665905
12	Hose 1/4" x 47", 7/16"JIC swivel fem. short bend 90 x 7/16"JIC swivel fem. – for 64"	1	665877
	Hose 1/4" x 53", 7/16"JIC swivel fem. short bend 90 x 7/16"JIC swivel fem. – for 76"	1	665875
13	Hose 5/8" x 42", 1 1/16"JIC swivel fem. short bend 90 x 7/8"JIC swivel short bend 90 – for 64"	2	665901
	Hose 5/8" x 48", 1 1/16"JIC swivel fem. short bend 90 x 7/8"JIC swivel fem. short bend 90 – for 76"	2	665900
14	Bolt hex. 1/4"NC x 2 1/2" GR 5, PTD	4	O/L
15	Lockwasher 1/4", PTD	4	O/L
16	Nut hex. 1/4"NC, PTD	4	O/L

CHUTE – FOR H64

REF.	DESCRIPTION	QTY	PART #
1	Chute	1	664792
2	Adjustment rod	1	654074
3	Adjustment tube	1	654076
4	Rotation bushing	1	659151
5	Retaining plate	1	665398
6	Retaining plate	1	665399
7	Spacer	4	665861
8	Cotter pin 1/4" x 2", PTD	2	O/L
9	Hairpin 5mm x 100mm, PTD	1	O/L
10	Bolt hex 1/4"NC x 1 1/4" GR 5, PTD	8	O/L
11	Lockwasher 1/4", PTD	8	O/L
12	Nut hex. 1/4"NC, PTD	8	O/L

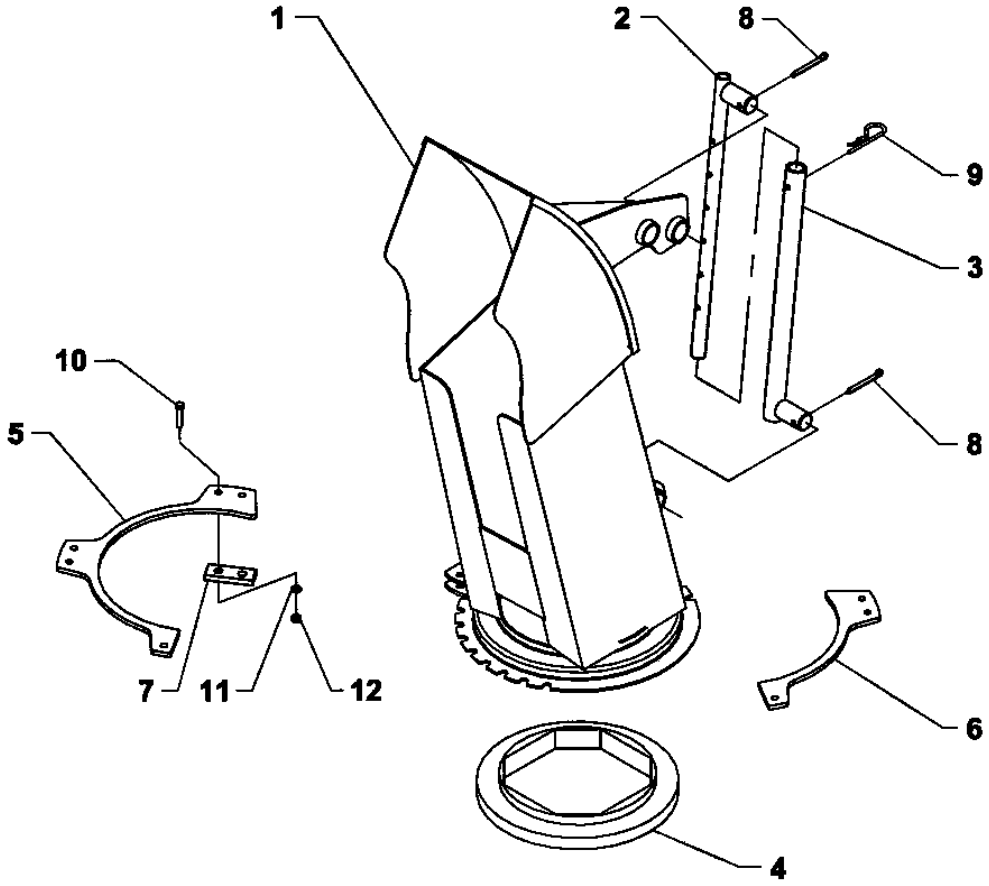

CHUTE – FOR H76

REF.	DESCRIPTION	QTY	PART #
1	Chute	1	664684
2	Adjustment rod	1	654074
3	Adjustment tube	1	654076
4	Rotation ring	1	662834
5	Retaining plate	2	665935
6	Spacer	4	665936
7	Spacer	4	665937
8	Cotter pin 1/4" x 2", PTD	2	O/L
9	Hairpin 5mm x 100mm, PTD	1	O/L
10	Carriage bolt 1/2"NC x 1 3/4" GR 5, PTD	6	O/L
11	Lockwasher 1/2", PTD	6	O/L
12	Nut hex. 1/2"NC, PTD	6	O/L

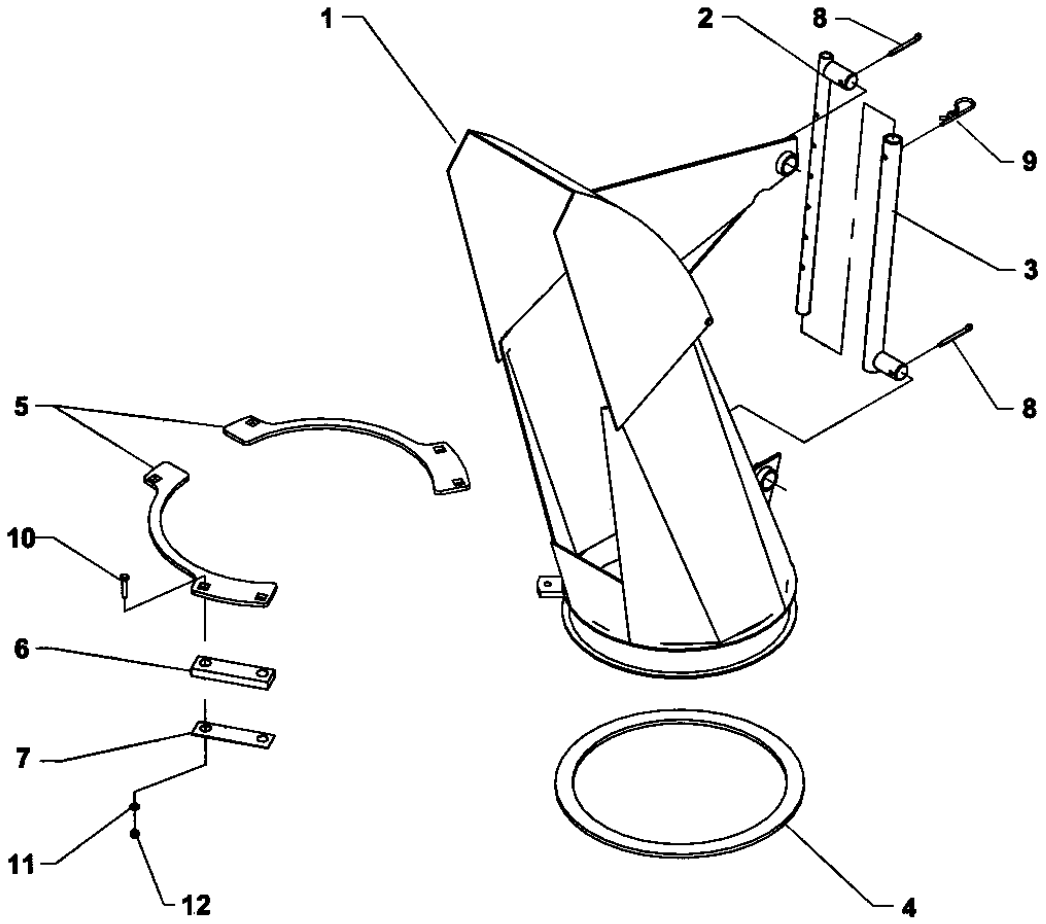

HYDRAULIC CHUTE ROTATION BY CYLINDER – FOR H64

RÉF.	DESCRIPTION	QTY	PART #
1	Cylinder support	1	664450
2	Bell Crank	1	664451
3	Push arm	1	664452
4	Pivot spacer	1	664429
5	Pivot bushing	1	664428
6	Flatwasher7/16" PTD	1	O/L
7	Nut hex. 3/8" NC PTD	1	O/L
8	Lockwasher 3/8" PTD	1	O/L
9	Nut stover 5/16" NC PTD	2	O/L
10	Flatwasher 3/8" PTD	2	O/L
11	Shoulder screw 3/8" x 1" x 5/16" NC PTD	1	664583
12	Bolt hex. 5/8" NC x 3 1/2" GR 5, PTD	1	O/L
13	Bolt hex. 3/8" NC x 1" GR 5, PTD	1	O/L
14	Shoulder screw 3/8" NC x 3/4" x 5/16" PTD	1	664576
15	Flatwasher nylon 7/16" PTD	1	O/L
16	Lockwasher 5/8" PTD	1	O/L
17	Nut 5/8" NC PTD	1	O/L

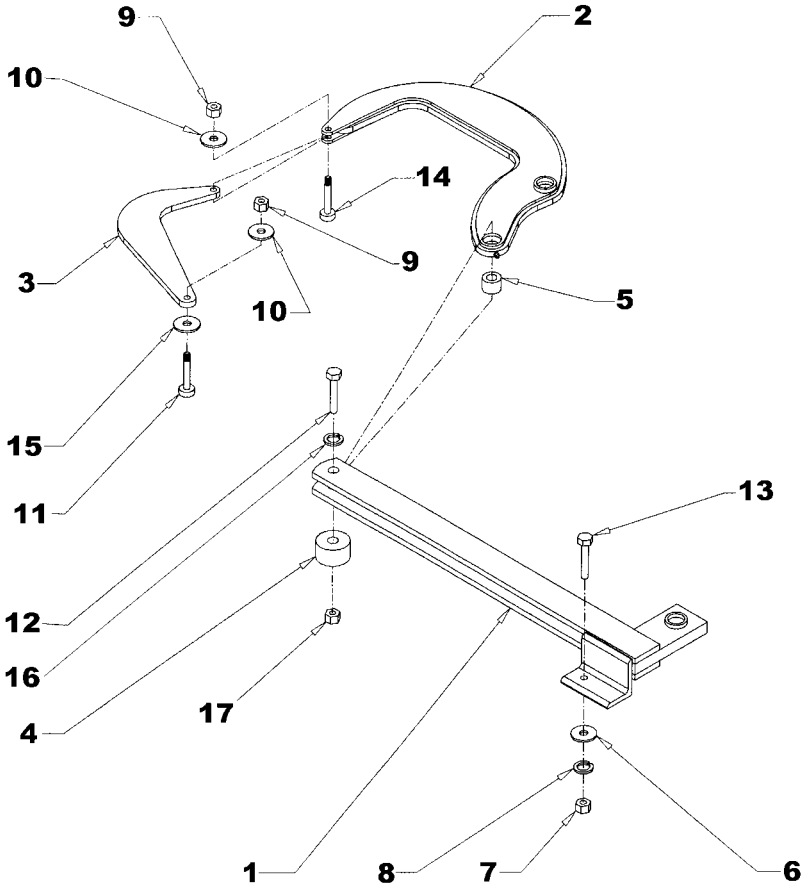

CHUTE ROTATION BY CYLINDER – FOR H76

RÉF.	DESCRIPTION	QTY	PART #
1	Cylinder support	1	664450
2	Bell crank	1	664518
3	Push arm	1	664501
4	Pivot spacer	1	664429
5	Pivot bushing	1	664428
6	Spacer	1	665943
7	Bolt hex. 3/8"NC x 1" GR 5, PTD	1	O/L
8	Bolt hex. 5/8"NC x 3 1/2" GR 5, PTD	1	O/L
9	Nut hex. 5/8"NC, PTD	1	O/L
10	Shoulder screw 3/8" x 1 1/4" x 5/16"NC PTD	1	3200013
11	Nut stover 5/16"NC, PTD	2	O/L
12	Shoulder screw 3/8" x 3/4" x 5/16" NC PTD	1	664576
13	Lockwasher 3/8", PTD	1	O/L
14	Lockwasher 5/8", PTD	1	O/L
15	Flatwasher 3/8", PTD	3	O/L
16	Flatwasher 7/16", PTD	1	O/L

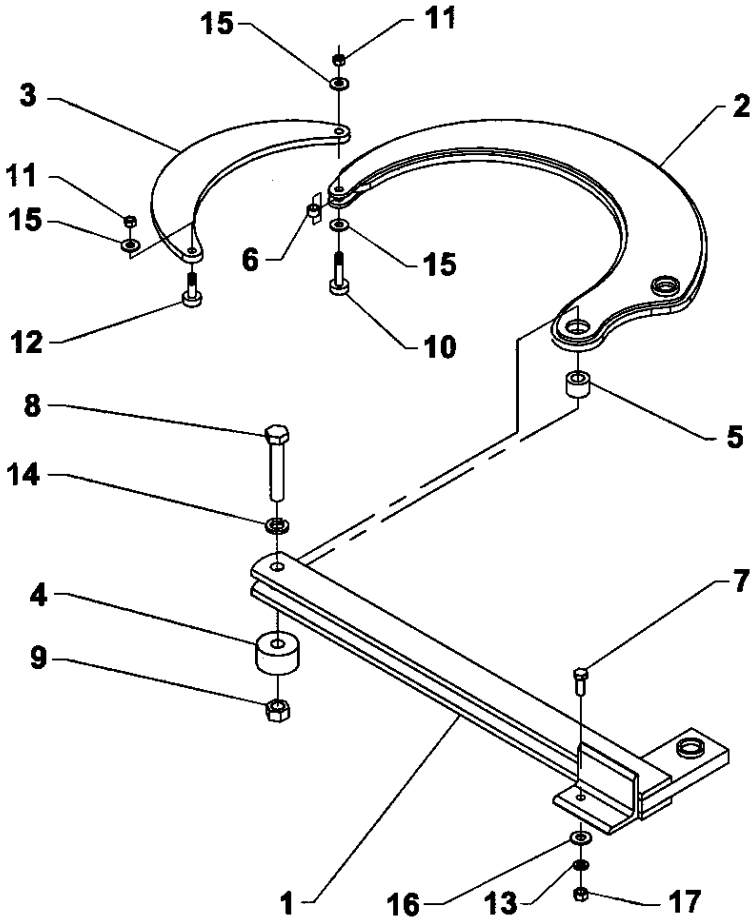

UNIVERSAL HITCH - 8153

REF.	DESCRIPTION	QTY	PART #
1	Hitch	1	665881
2	Hitch arm	2	665882
3	Upper bracket	1	665883
4	Bolt hex. 3/4" NC x 6", PTD gr.5	2	O/L
5	Bolt hex. 3/4" NC x 3 1/2", PTD gr.5	2	O/L
6	Bolt hex. 5/8" NC x 2", PTD gr.5	1	O/L
7	Bolt hex. 5/8" NC x 1 1/2", PTD gr.5	1	O/L
8	Lockwasher 5/8", PTD	2	O/L
9	Lockwasher 3/4", PTD	4	O/L
10	Nut hex. 5/8" NC, PTD	2	O/L
11	Nut hex. 3/4" NC, PTD	4	O/L

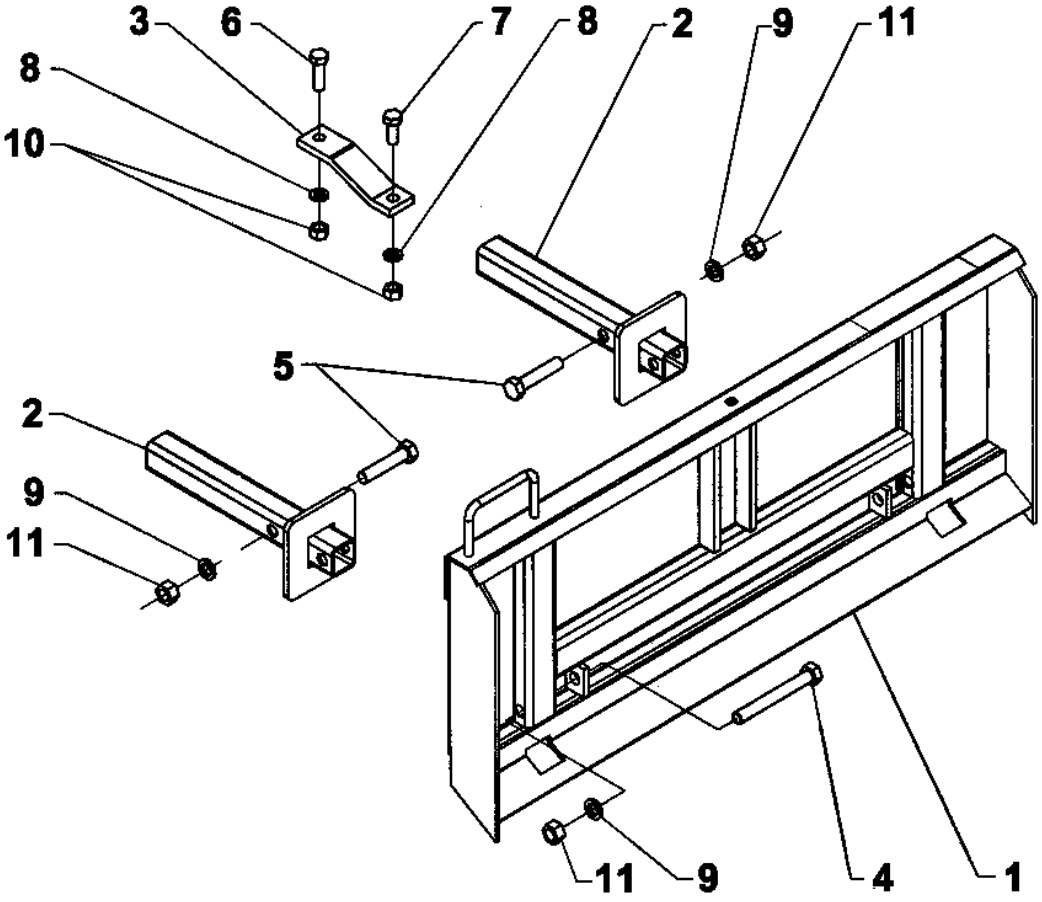

DRIFT CUTTERS – 8152 (OPTION)

REF.	DESCRIPTION	QTY	PART #
1	Left drift cutter	1	665874
2	Right drift cutter	1	665879
3	Bolt hex. 3/8"NC x 1", PTD, gr.5	2	O/L
4	Bolt hex. 5/16"NC x 1", PTD, gr.5	1	O/L
5	Bolt hex 1/2"NC x 1 1/4", PTD, gr.5	1	O/L
6	Lockwasher 3/8", PTD	2	O/L
7	Lockwasher 5/16", PTD	1	O/L
8	Lockwasher 1/2", PTD	1	O/L
9	Nut hex. 3/8"NC, PTD	2	O/L
10	Nut hex. 5/16"NC, PTD	1	O/L
11	Nut hex. 1/2"NC, PTD	1	O/L

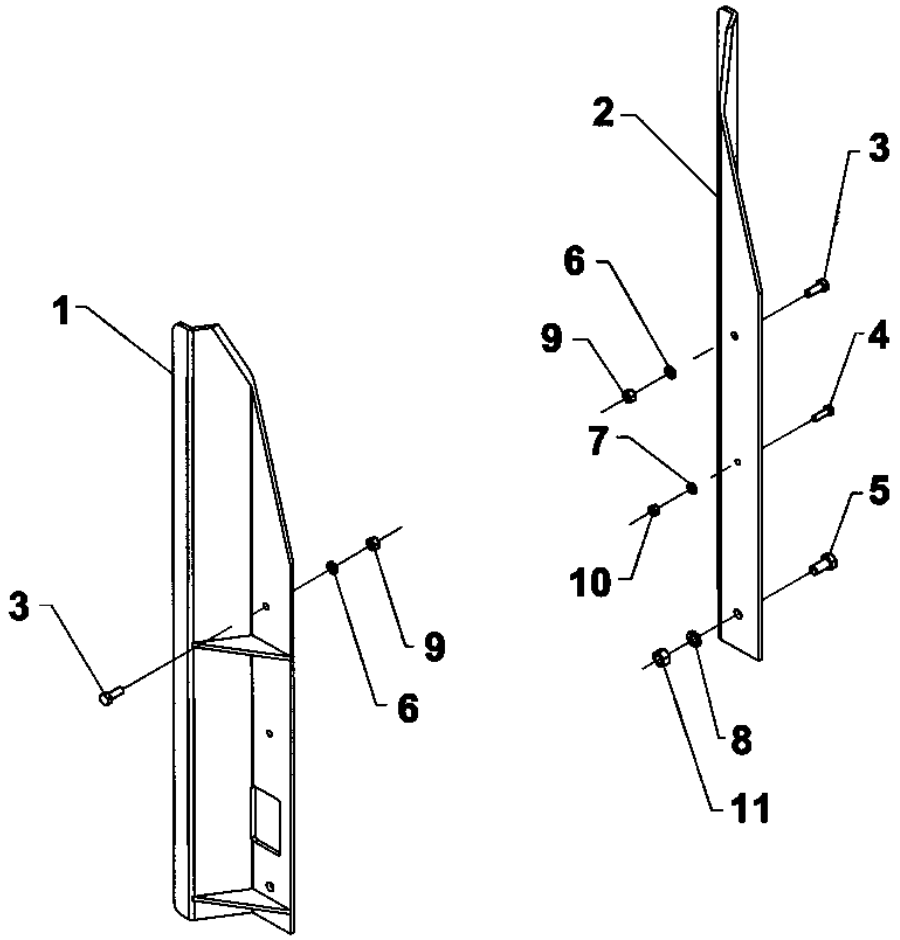

HYDRAULIC ROTATION- 8183

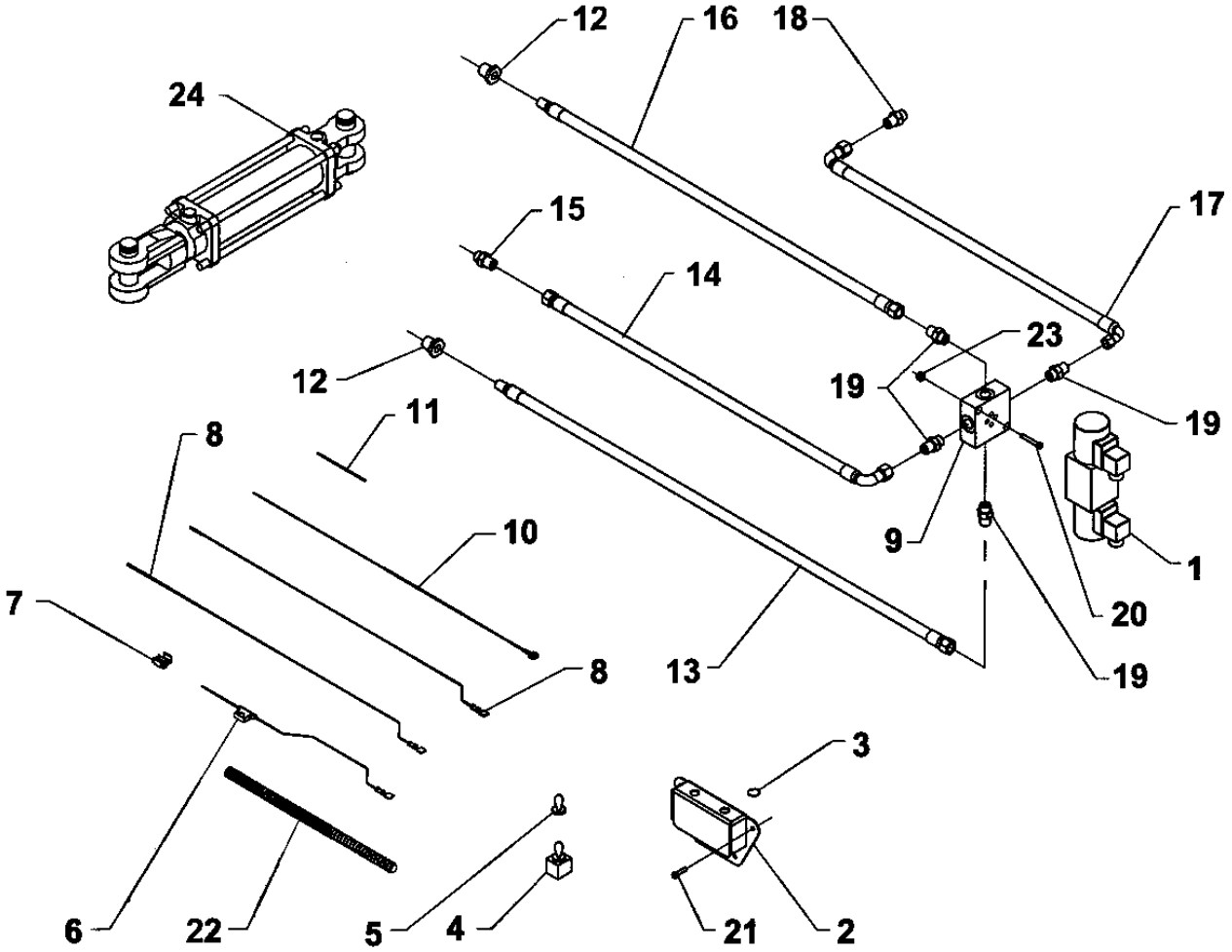

HYDRAULIC ROTATION - 8183

REF.	DESCRIPTION	QTY	PART #
1	Electro-hydraulic valve	1	3900027
2	Switch box	1	666048
3	Plastic cap	1	662530
4	Switch 6 blades	1	4000027
5	Rubber cap	1	658666
6	Fuse wire 72"	1	666065
7	Tap connector	1	656665
8	Positive wire 360"	2	666066
9	Electro-hydraulic valve manifold	1	3900028
10	Negative wire 360"	1	666067
11	Negative wire 9"	1	666068
12	Adapter 1/2"NPT male x 1/4"NPT female	2	657798
13	Hose 1/4"x34", 9/16"JIC swivel fem. x 1/4" swivel male	1	3700010
14	Hose 1/4"x24", 9/16"JIC swivel fem. short bend 90 x 9/16"JIC swivel fem.	1	3700007
15	Flow restrictor 5/64"	1	666069
16	Hose 1/4"x27", 9/16"JIC swivel fem. x 1/4" swivel male	1	3700009
17	Hose 1/4"x22 1/4", 7/16"JIC swivel fem. short bend 90 x 9/16"JIC swivel fem. short bend 90	1	3700008
18	Connector 7/16" male ORB x 7/16" male JIC	1	664271
19	Connector 9/16" male ORB x 9/16" male JIC	4	661544
20	Socket head capscrew #10-24 x 1 1/4" GR 5, PTD	2	O/L
21	Self-drilling screw #10-24 x 1/2"	4	O/L
22	Loom	1	666053
23	Nylon insert locknut #10-24 PTD	2	O/L
	Cylinder kit 8150		
23	Cylinder 3" x 8"	1	654129
	Seal kit for 654129 cylinder (not shown)	1	664176

HYDRAULIC DEFLECTOR - 8184

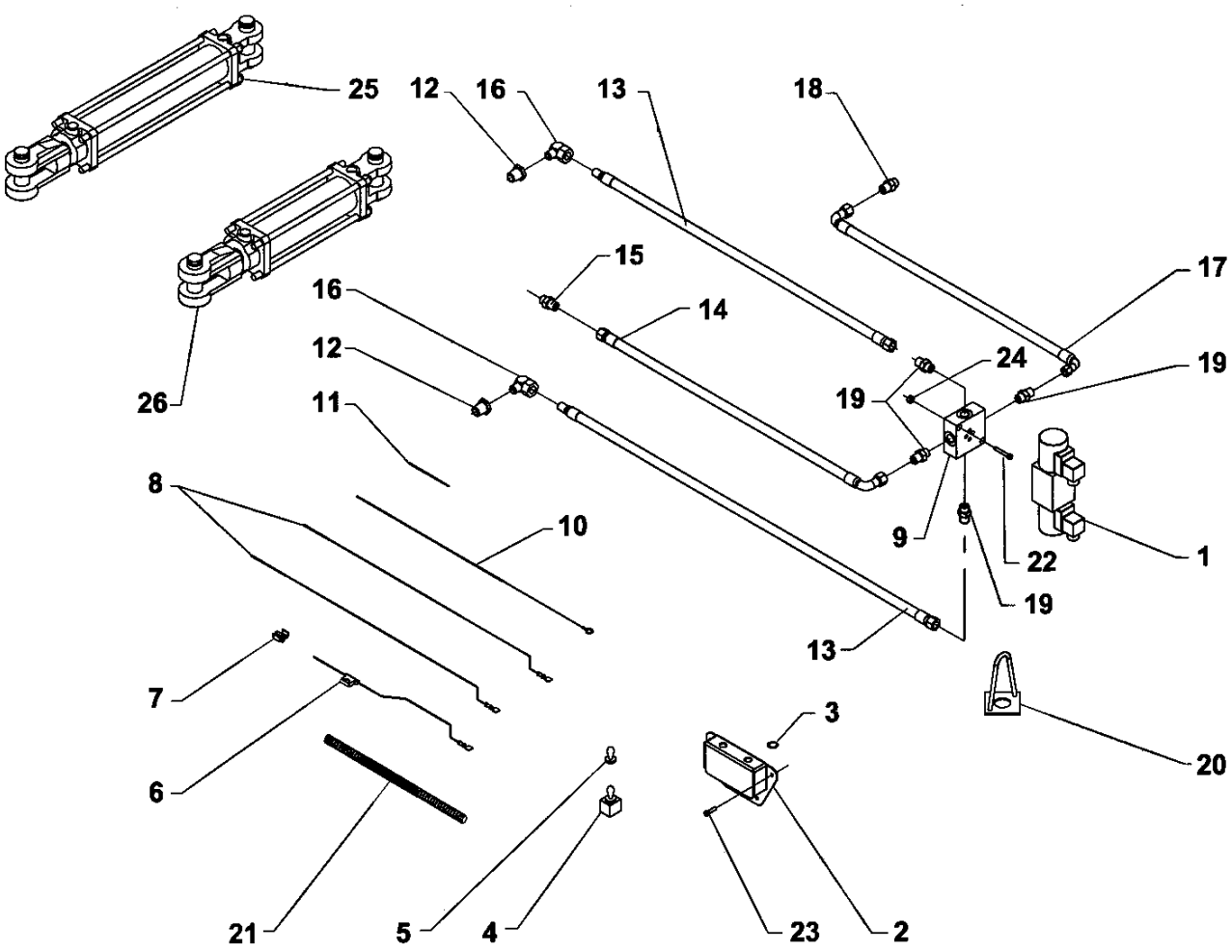

HYDRAULIC DEFLECTOR - 8184

REF.	DESCRIPTION	QTY	PART #
1	Electrio-hydraulic valve	1	3900027
2	Switch box	1	666048
3	Plastic cap	1	662530
4	Switch 6 blades	1	4000027
5	Rubber cap	1	658666
6	Fuse wire 72"	1	666065
7	Tap connector	1	656665
8	Ground wire 360" (white)	2	666066
9	Electro-hydraulic valve manifold	1	3900028
10	Negative wire 360" (black)	1	666067
11	Negative wire 9"	1	666068
12	Adapter 1/2"NPT male x 3/8"NPT female	2	654551
13	Hose 1/4" x 83", 9/16"JIC swivel fem. x 1/4" swivel male	2	3700011
14	Hose 1/4" x 37", 9/16"JIC swivel fem. short bend 90 x 9/16"JIC swivel fem.	1	3700016
15	Flow restrictor 5/64"	1	666069
16	Elbow 90°, 3/8"NPT male x 1/4"NPT swivel female	2	654438
17	Hose 1/4" x 45", 7/16"JIC swivel fem. short bend 90 x 9/16"JIC swivel fem. short bend 90	1	3700017
18	Connector 7/16" male ORB x 7/16" male JIC	1	664271
19	Connector 9/16" male ORB x 9/16" male JIC	4	661544
20	Hose support	1	666072
21	Loom	1	666053
22	Socket head capscrew #10-24 x 1 1/4", PTD	2	O/L
23	Self-drilling screw #10-24 x 1/2", PTD	4	O/L
24	Nylon insert locknut #10-24 PTD	2	O/L
	Hydraulic cylinder 8150 for H76		
25	Cylinder 3" x 8"	1	654129
	Seal kit for 654129 cylinder (not shown)		664176
	Hydraulic cylinder 8155 for H64		
26	Cylinder 2" x 6"	1	3900002
	Seal kit for 3900002 cylinder (not shown)		2600047

ELECTRIC ROTATION /DEFLECTOR- 8151

REF.	DESCRIPTION	QTY	PART #
1	Electric Actuator	1	662983
2	Switch box	1	666048
3	Switch	1	663383
4	Rubber cap	1	658666
5	Plastic cap	1	662530
6	Clevis – rod end	1	666049
7	Clevis – fixed end	1	666050
8	Pin 1"	2	666057
9	Ground wire 72" (black)	1	666054
10	Tap connector	1	656665
11	Fuse wire 72" (red)	1	666055
12	Actuator wire	1	666056
13	Spring pin 3/16" x 1 3/4", PTD	2	O/L
14	Hairpin 4mm x 80mm, PTD	2	O/L
15	Self-drilling screw #10 x 1/2", PTD	4	O/L
16	Bolt hex. 1/2"NC x 2 1/2" GR 5, PTD	2	O/L
17	Nylon insert locknut 1/2"NC, PTD	2	O/L
18	Loom	1	666053

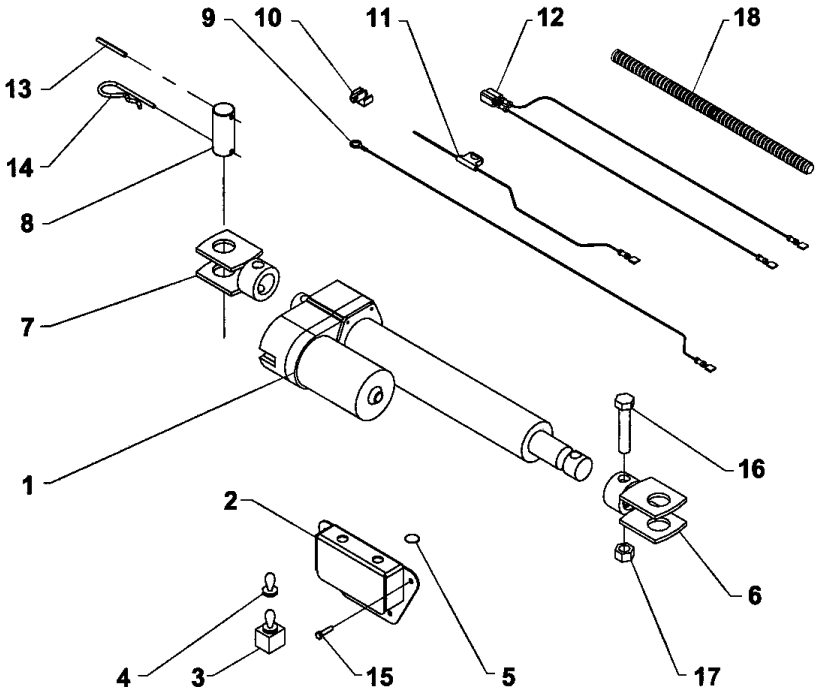

ELECTRIC DEFLECTOR - 8154

REF.	DESCRIPTION	QTY	PART #
1	Electric actuator	1	665573
2	Switch box	1	666048
3	Switch	1	663383
4	Rubber cap	1	658666
5	Plastic cap	1	662530
6	Clevis – rod end	1	666049
7	Clevis – fixed end	1	666051
8	Pin 1"	2	666057
9	Ground wire 72" (black)	1	666054
10	Tap connector	1	656665
11	Fuse wire 72" (red)	1	666055
12	Actuator wire	1	666056
13	Spring pin 3/16" x 1 3/4", PTD	2	O/L
14	Hairpin 4mm x 80mm, PTD	2	O/L
15	Self-drilling screw #10 x 1/2", PTD	4	O/L
16	Bolt hex. 1/2"NC x 2 1/2", PTD	2	O/L
17	Nylon insert locknut 1/2"NC, PTD	2	O/L
18	Loom	1	666053

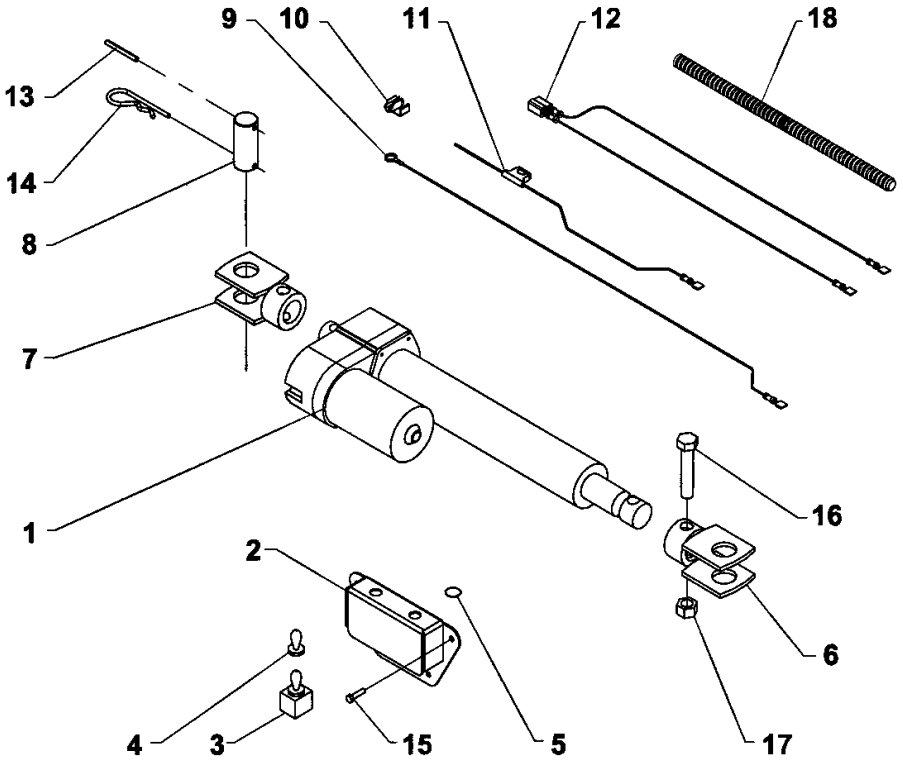

HYDRAULIC MOTOR

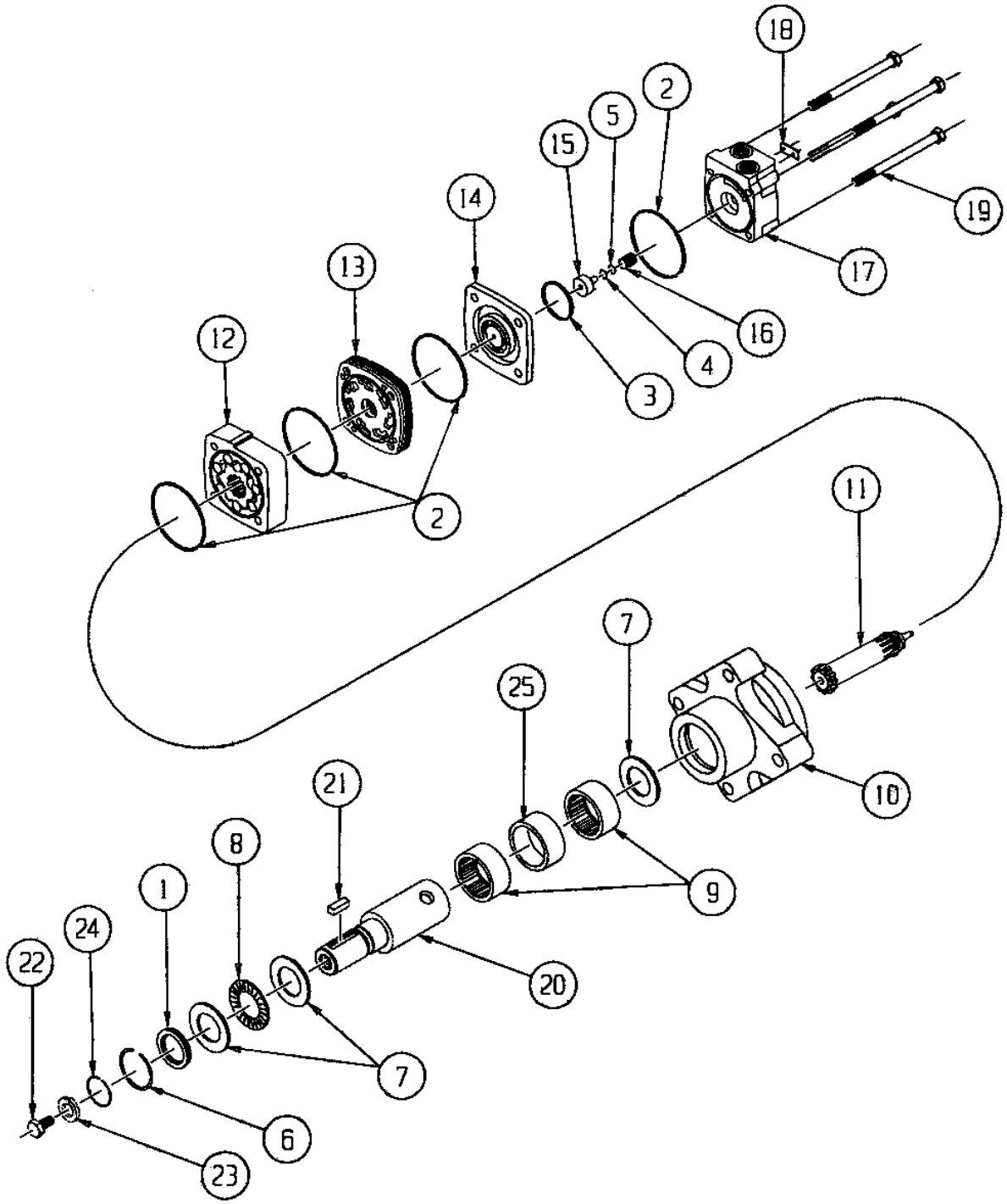

HYDRAULIC MOTOR

REF.	DESCRIPTION	QTY	PART #
	Seal Kit (Includes #1 to 5)		3900042
1	Dust seal	1	-----
2	Body seal	4	-----
3	Commutator seal	1	-----
4	O-Ring seal	1	-----
5	Teflon backup seal	1	-----
6	Snap ring	1	3900043
7	Thrust washer	1	3900044
8	Thrust bearing	1	3900045
9	Housing bearing	1	3900046
10	Housing Kit, (includes#7, #9, #25)	1	3900047
11	Drive link kit for 3900019	1	3900048
	Drive link kit for 3900023	1	3900049
	Drive link kit for 3900020	1	3900050
	Drive link kit for 3900024	1	3900051
12	Rotor for 3900019	1	3900052
	Rotor for 3900023	1	3900053
	Rotor for 3900020	1	3900054
	Rotor for 3900024	1	3900055
13	Manifold	1	3900056
14	Commutator assembly	1	3900057
15	Endcover piston	1	3900059
16	Piston spring	1	3900060
17	Endcover (include #4, #5, #15, #16)	1	3900063
18	Serial number plate	1	---
19	Bolt set kit (4) for 3900019	1	3900064
	Bolt set kit (4) for 3900023	1	3900065
	Bolt set kit (4) for 3900020	1	3900066
	Bolt set kit (4) for 3900024	1	3900067
20	Shaft 1 1/4"	1	3900068
21	key	1	3900069
22	Hex. bolt 5/8"NF x 1 1/4", PTD	1	O/L
23	Lockwasher 5/8", PTD	1	O/L
24	Wire ring	1	3900070
25	Bearing spacer	1	3900071
	2000 PSI relief valve (not shown)	1	3900061
	3000 PSI relief valve (not shown)	1	3900062
	Midmount commutator (not shown)	1	3900058

RAD TECHNOLOGIES INC.

RAD TECHNOLOGIES INC. warrants to the original buyer that the equipment is free from defects in material and workmanship. RAD TECHNOLOGIES INC.'s obligation, under this warranty, will be limited to the repair or replacement of any non-wear part or component, which RAD TECHNOLOGIES INC. finds to be defective within **one year** from the date of original purchase (unless otherwise-specified). The applicable warranty period for commercial or rental use shall be ninety (90) days from the date of purchase

In no event shall RAD TECHNOLOGIES INC. be liable for consequential, special, direct or indirect damages incurred by the buyer/user.

All components not manufactured by RAD TECHNOLOGIES INC. (such as motors, actuators, hydraulic components, tires, ...etc.) are covered by the original manufacturer's warranty in conjunction with RAD TECHNOLOGIES INC.

RAD's obligation under this warranty shall be limited to repairing or replacing, free of charge to the original purchaser, any part that, in RAD's judgment, shall show evidence of such defect, provided the **distributor** returns the part prepaid within thirty (30) days from date of failure.

This warranty shall not be interpreted to render RAD TECHNOLOGIES INC. liable for injuries or damages of any kind or nature to person or property. This warranty does not extend to losses because of delays, or to any expenses or losses incurred for labor, substitute machinery, rental or for any other reason.

Except as set forth above, RAD TECHNOLOGIES INC. shall have no obligation or liability of any kind on account of any of its equipment and shall not be liable for special or consequential damages. RAD TECHNOLOGIES INC. makes no other warranty, expressed or implied, and specifically, RAD TECHNOLOGIES INC. disclaims any implied warranty or merchantability or fitness for a particular purpose**. Some states or provinces do not permit limitations or exclusions of implied warranties or incidental or consequential damages, so the limitations or exclusions in this warranty may not apply.**

This warranty is subject to any existing conditions of supply, which may directly affect our ability to obtain materials or manufacture replacement parts. RAD TECHNOLOGIES INC. reserves the right to make improvements in design or changes in specifications at any time, without incurring any obligation to owners of units previously sold.

No one is authorized to alter, modify or enlarge this warranty nor the exclusions, limitations and reservations.

2835 Chemin de l'Aéroport, Thetford Mines (Québec) G6G 5R7
Tél.: (418) 338-4499 Fax: (418) 388-6090
Internet: www.radinter.com EMAIL: radtech@radinter.com

TORQUE SPECIFICATION TABLE

GENERAL SPECIFICATION TABLE
Use the following torques when special torques are not given
NOTE: These values apply to fasteners as received from supplier, dry, or when lubricated with normal engine oil. They do not apply if special graphited or moly sidulphide greases or other extreme pressure lubricants are used. This applies to both UNF and UNC threads.

SEE Grade No.		2				5				8			
BOLT HEAD IDENTIFICATION MARKS AS PER GRADE NOTE: MANUFACTURING MARKS WILL VARY.													
		Torque				Torque				Torque			
BOLT SIZES		Pounds-Foot		Newtons-Meter		Pounds-Foot		Newtons-Meter		Pounds-Foot		Newtons-Meter	
Inches	Millimeters	MIN.	MAX.	MIN.	MAX.	MIN.	MAX.	MIN.	MAX.	MIN.	MAX.	MIN.	MAX.
1/4	6.35	5	6	6.8	8.13	9	11.0	12.2	14.9	12	15	16.3	30.3
5/16	7.94	10	12	13.6	16.3	17	20.5	23.1	27.8	24	29	32.5	39.3
3/8	9.53	20	23	27.1	31.2	35	42.0	47.5	57.0	45	54	61.0	73.2
7/16	11.11	25	30	40.7	47.4	54	64.0	73.2	86.8	70	84	94.9	113.9
1/2	12.70	45	52	61.0	70.5	80	96.0	108.5	130.2	110	132	149.2	179.0
9/16	14.29	65	75	88.1	101.6	110	132.0	149.2	179.0	160	192	217.0	260.4
5/8	15.88	95	105	128.7	142.3	150	180	203.4	244.1	220	264	298.3	358.0
3/4	19.05	150	185	203.3	250.7	270	324	366.1	439.3	380	456	515.3	618.3
7/8	22.23	160	200	216.8	271.0	400	480	542.4	650.9	600	720	813.6	976.3
1	25.40	250	300	338.8	406.5	580	696	786.5	943.8	900	1080	1220.4	1464.5
1 1/8	25.58	-	-	-	-	800	880	1084.8	1193.3	1280	1440	1735.7	1952.6
1 1/4	31.75	-	-	-	-	1120	1240	1518.7	1681.4	1820	2000	2467.9	2712.0
1 3/8	34.93	-	-	-	-	1460	1680	1979.8	2278.1	2380	2720	3227.3	3688.3
1 1/2	38.10	-	-	-	-	1940	2200	2630.6	2983.2	3160	3560	4285.0	4827.4

METRIC BOLT TORQUE SPECIFICATIONS

		Coarse thread					Fine Thread				
Size of screw	Grade No.	Pitch (mm)	Pounds-Foot		Newtons-Meter		Pitch (mm)	Pounds-Foot		Newtons-Meter	
			MIN.	MAX.	MIN.	MAX.		MIN.	MAX.	MIN.	MAX.
M6	4T 7T 8T	1.0	3.6 5.8 7.2	5.8 9.4 10	4.9 7.9 9.8	7.9 12.7 13.6	-	- - -	- - -	- - -	- - -
M8	4T 7T 8T	1.25	7.2 17 20	14 22 26	9.8 23 27.1	19.0 29.8 35.2	1.0	12 19 22	17 27 31	16.3 25.7 29.8	23.0 36.6 42
M10	4T 7T 8T	1.5	20 34 38	25 40 46	27.1 46.1 51.5	33.9 54.2 62.3	1.25	20 35 40	29 47 52	27.1 47.4 54.2	39.3 63.7 70.5
M12	4T 7T 8T	1.75	28 51 57	34 59 66	37.9 69.1 77.2	46.1 79.9 89.4	1.25	31 56 62	41 68 75	42 75.9 84	55.6 92.1 101.6
M14	4T 7T 8T	2.0	49 81 96	56 93 109	66.4 109.8 130.1	75.9 126 147.7	1.5	52 90 107	64 106 124	70.5 122 145	86.7 143.6 168
M16	4T 7T 8T	2.0	67 116 129	77 130 145	90.8 157.2 174.8	104.3 176.2 196.5	1.5	69 120 140	83 138 158	93.5 162.6 189.7	112.5 187 214.1
M18	4T 7T 8T	2.0	88 150 175	100 168 194	119.2 203.3 237.1	136 227.6 262.9	1.5	100 177 202	117 199 231	136 239.8 273.7	158.5 269.6 313
M20	4T 7T 8T	2.5	108 186 213	130 205 249	146.3 252 288.6	176.2 277.8 337.4	1.5	132 206 246	150 242 289	178.9 279.1 333.3	203.3 327.9 391.6

Manufactured by:

RAD Technologies Inc.
2835, Chemin de l'Aéroport
Thetford Mines, Québec, Canada, G6G 5R7
Tel.: (418) 338-4499 - Fax.: (418) 338-6090
E-mail : radtech@radinter.com
Internet : www.radinter.com

Printed in Canada